LCN®

www.LCN.eu

Product handbook

Perfection. Made in Germany.

Local Control Network

Product handbook (original edition)

Edition 03/2023

Published by:

ISSENDORFF KG
Magdeburger Street 3
30880 Laatzen-Rethen
E-mail: info-de@lcn.de
Phone: +49 5066 998-0

This publication is for general information only. Subject to technical changes, deviations in illustrations and printing errors. The stated dimensions may differ and should be checked on the device. Up-to-date information on LCN products is available on our website www.lcn.eu or from our sales partners.

LCN | Product handbook

The **High-End** Building Management

LCN | Content

BUS MODULES

LCN-UPP	Universal switching and dimming module for flush mounting	8
LCN-UPU	Universal switch- and dimming module for flush mounting	10
LCN-UMR	Universal shutter/blind module for flush mounting	12
LCN-UMR24	Universal shutter/blind module 24 Volt for flush mounting	14
LCN-UMF	Universal shutter/blind module 24 Volt for flush mounting	16
LCN-UPS	Universal sensor module for flush mounting	18
LCN-UPS24	Universal sensor module 24 Volt for flush mounting	20
LCN-SH	Universal switching and dimming module for DIN rail mounting	22
LCN-SHS | LCN-ESD	Universal sensor module for DIN rail | screw mounting	24
LCN-SHU	Universal sensor/actuator with trailing or leading phase-cut	26
LCN-SHD | LCN-ESD	DALI room controller/sensor module for DIN rail | screw mounting	28
LCN-HU	Universal switching and dimming module for rail mounting	30
LCN-SR6	Relay module with six outputs for DIN rail mounting	32

COUPLERS

LCN-PKU	Coupler module for connection to PC for DIN rail mounting	36
LCN-VISU	Network coupler with integrated mini-visualization	38
LCN-IS2	Isolation amplifier for DIN rail mounting	40
LCN-IS2/24	24 Volt isolation amplifier for DIN rail mounting	42
LCN-LLG	Glass fibre optics transceiver for DIN rail mounting	44
LCN-LLGS	Fiber optic coupler module for singlemode fiber optics	46
LCN-LLK	Fibre optics transceiver for plastic cable DIN rail mounting	48
LCN-SK	Segment coupler for DIN rail mounting	50
LCN-EGR	EnOcean wireless gateway for flush mounting	52

REMOTE CONTROLS

LCN-RR	Infrared receiver with lens	56
LCN-RT	IR transmitter with four keys	58

KEY SENSORS

LCN-GT2 | -GTS2	Glass touch keypad with two capacitive keys	62
LCN-GT6 | -GTS6	Glass touch keypad with six keys and six LEDs	64
LCN-GT8 | -GTS8	Glass touch keypad with eight keys, bargraph and temperature sensor	66
LCN-GT12 | -GTS12	Glass touch keypad with 12 keys and 12 LEDs plus bargraph	68
LCN-GT6L	Glass touch keypad with with six keys and Corona® light	70
LCN-GT4D | -GTS4D	Information keypad with 2.8'' graphic display and four capacitive keys	72
LCN-GT10D | -GTS10D	Glass Touch-Keypad with 6 + 4 keys and 2.8" graphic display	74
LCN-MT4	Four key sensor for 55 mm central inserts	76
LCN-G55 | -GS55	Glass frame for mounting System 55 mm (e.g. GIRA)	78
LCN-G55-2 | -GS55-2	Double glass frame for mounting System 55 mm (e.g. GIRA)	79
LCN-GG1	Gesture controlled switch including Corona® backlight	80

INPUTS

LCN-T4I	Converter for connecting to 4 potential-free push-buttons	84
LCN-T8	Converter for eight conventional keys with acoustic signalling	86
LCN-TEU	Universal converter for EIB/KNX standard key sensors	88
LCN-TE1	Universal converter for single and triple/quadruple key sensors	90
LCN-BT4H	Push-button converter or quadruple binary input for I-Port	92
LCN-BT4R	Push-button converter or binary input 4 x 230 Volt for flush mounting	94
LCN-BU4L	Push-button converter or quadruple binary input 6 - 24 Volt	96
LCN-TU4C	Capacitive key sensor with four sensor pads for wall mounting	98
LCN-TL6	Push-button converter for GIRA SPS for flush mounted boxes	100
LCN-TL12R	Tableau converter for eight potential-free keys, 12 LEDs, com. cathode	102
LCN-TL12H	Tableau converter for eight potentional-free keys, 12 LEDs, com. anode	104
LCN-TLK12H	Tableau converter for eight potentional-free keys, 12 LEDs, com. cathode	106
LCN-B3I	Triple binary input for the I-Port	108
LCN-B3IN	Triple binary input with power supply for flush mounting	110
LCN-BS4	Current sensor 4 x 16 A for DIN rail mounting	112
LCN-TXR	KNX push-button adapter	114

SENSORS

LCN-TS	Precision temperature sensor (0,1°C) for the I-Port	118
LCN-TST	Temperature sensor for outddor and immersion sleeve mounting	120
LCN-PMI	Passive infrared presence/motion detector	122
LCN-GUS | -GUS68	Sensor for temperature, light, humidity, motion and IR receiver	124

LCN | Content

LCN-GSA4	Air quality sensor with four buttons	126
LCN-CO2	Carbon dioxide sensor for I-Port (CO_2) for the I-Port	128
LCN-AD2	Double analogue to digital converter for DIN rail mounting	130
LCN-ZEA	GPS time receiver for the I-Port	132
LCN-GFPS	Fingerprint sensor in GT design	134
OUTPUTS		
LCN-R1U	Single relay 16 A for flush mounting	138
LCN-R2U	Double relay 8 A for flush mounting	140
LCN-FI1	Supressing filter for flush mounting	142
LCN-DDR	DSI/DALI controller for flush mounting	144
LCN-R6H	Relay module 6 x 16 A outputs for DIN rail mounting	146
LCN-R4M2H	Relay module 4 x 2 motor outputs for DIN rail mounting	148
LCN-R2H	Relay module 2 x 16 A outputs for DIN rail mounting	150
LCN-A4H	Heating actuator with four outputs each 100mA for DIN rail mounting	152
LCN-AO1R	Analogue output converter 230 V/0-10 V for flush mounting	154
LCN-DMXH	DMX 512 master/mlave controller for DIN rail mounting	156
LCN-DIH	DALI controller for DIN rail mounting	158
LCN-HL4+ | LCN-EL4+	LED four channel dimmer	160
TRANSPONDERS		
LCN-ZTK2	Transponder in bank card format	164
LCN-ZTS	Transponder as a key-ring	165
LCN-GT2T	Transponder-reader with two capacitive sensor keys	166
WEATHER SENSORS		
LCN-WIH	Weather station with DIN rail indoor unit	170
LCN-IW	Wind sensor	172
LCN-IW65	Complete wind sensor in IP65 case	174
LCN-LSA	Complete light sensor in IP65 case in protection art IP65	176
SOFTWARE		
LCN-PRO	LCN programming software (based on Windows)	180
LCN-PCHK	IP coupling software	181
LCN-GVS	Global Visualization System	182
LCN-GVShome	Visualisation server with LCN-GVS	184
ACCESSORIES		
LCN-WB11 | LCN-WB22	Wallbox with 11 kW or 22 kW	188
LCN-IV	I-Port extension for LCN	190
LCN-IVH	Adapter for I-Port extension or duplication for DIN rail mounting	192
LCN-NU9	Power supply unit for power supply of 9 Volt LCN peripherals	194
LCN-NUI	I-Port power supply unit for flush mounting	196
LCN-NUI24	24 V I-Port power supply unit for flush mounting	198
LCN-NIH	Power supply LCN-GT for DIN rail mounting	200
LCN-NDH	DALI power supply for DIN rail mounting	202
LCN-NH12	12 V motor power supply unit DIN rail mounting	204
LCN-NH24	24 V motor power supply unit	205
LCN-C2GH	Base load module for DIN rail mounting	206
LCN-C2GR	Base load module for flush mounting	207
LCN-K3	Terminal block for DIN rail mounting	208
LCN-AVN	Mains voltage actuator 230 V for heating and air conditioning	210
LCN-AVC	Low voltage actuator 0-10 V for heating and air conditioning	211
LCN-RSU	Rest voltage suppressor for LED lamps in dimming operation	212
LCN-A6835	Adapter frame for reducing flush-mounted boxes from 68 mm to 35 mm	213
LCN-SKO	Training case	214

LCN | Bus modules

LCN-UPP

Universal switching and dimming module for flush-mounting

The LCN-UPP flush-mounted module is a sensor/actuator module. It has two switchable or dimmable electronic outputs with 230 Volt. Two additional outputs are simulated and not routed to the outside. The LCN-UPP also has T and I connectors for connecting further LCN sensors and actuators. The internal operating program can be controlled by means of the LCN system.The LCN-PRO software can be freely parametrized. The LCN-UPP is installed decentrally in deep switch, distributor or electronics boxes.

Application fields

- High quality, theatre standard lighting control, sophisticated lighting effects and daylight dependent lighting control.
- Control of solar shading and conservatories.
- Individual room control: cooling, heating and ventilation.
- Access control with infrared remote control and transponder.
- Automatic control with numerous timers and associated logical operations/processes.
- Tableau/control panel installations with four LEDs and hierarchical logical operations for authorising and displaying.
- Alarm systems with multiple zones and complex requirements, blocking locks, early warning alarm systems etc.
- Associated logical operations across installation/facility boundaries including: lighting, shading, alarm, access contr etc., giving high performance through the cost efficient use of multiple sensors and actuators.
- All functions can be used independently and are also available to be used simultaneously.

Hardware

- 230 Volt power supply 50/60 Hz, 110 Volt optionally
- Two electronic switched outputs 230 Volt , max. 300 VA: Zero voltage crossing when switching or dimming (leading edge phase)
- T-Port for connection of up to eight keys via key converter LCN- T8, LCN-TEx or key sensors LCN-GT(S)12, LCN-GT(S)6 etc.
- I-Port for combined connection of LCN-RR (IR-remote-control receiver), LCN-TS (Temperature sensor), LCN-PMI (Motion detector), LCN-ULT (Transponder reader), LCN-GT(S)xD (glass Touch-Keypad), LCN-BT4H/R (Binary input) etc.

Note:
For dimming, the LCN-FI1 filter is required! When operating conventional motors with built-in limit switches, an LCN-R2U has to be used.

Functional description

Four outputs, two of them are electronic outputs for switching, dimming, brightness and blending controls which can all be set individually. Two timing circuits 10 ms to 40 minutes allow momentary timers, staircase lighting, etc. All three outputs have the possibility for storing up to 100 light scenes each storing brightness and blending time. The LCN-UPP supports two DSI signals, three DALI-groups respectively through LCN-DDR. Additionally, all of the DALI and DSI-elements can be directly controlled via the LCN-DDR. Connection for either eight conventional keys with adapter cable LCN-T8, four EnOcean radio switch LCN-T4ER or KNX/EIB standard sensor keys LCN-TEx, e. g. fourfold = eight keys with three commands each being sent to two addresses, modules or groups. In total 32 keys in four tables = 192 commands to 64 target addresses. The keys support three functions: Short, Hold and Release.

With the adapter LCN-TEx standard EIB key sensors can be connected. Giving Support and parametrisation of the LEDs on standard EIB key sensors. Tableau/control panel functions for twelve lights with four states: On, Off, Flash and Flicker. Four logical operations for hierarchical fault signal processing in compliance with DIN. Decoding of the IR remote control receiver. Immediate evaluation or via a main computer. Functions for key levels, encrypted transmission, transmission distinction, transponder differentiation, transponder combinable, person identification.

Further functions:
- Two freely parametrable continuous action controllers. Results and any variables can be distributed on the bus.
- Analogue value data processing over four thresholds with hysteresis; can also be used for controlling, counting/calculating.
- Transponder data processing of up to 16 transponders, unlimited number with use of the visualisation software LCN-GVS.
- Code lock functions with LCN-GT6, -GT8 and GT12
- Control with independent and logical operations, single key locking and unlocking, hierarchical switch authorisation.
- Four timers 1 s to 45 days, two timers relay periodic clock.
- Override during power failure for up to 20 sec with power failure recognition.
- Four level acknowledgement and notification system.
- Twelve variables.
- The execution is uniquely confirmed.
- Automatic generation of real status messages for visualization.

LCN-UPP

Universal switching and dimming module for for flush-mounting

- **Combined sensor-/actuator module**
- **Two switch-/dim outputs 230 Volts, 300 VA**
- **Two further simulated outputs**
- **With T-Port and I-Port connections**
- **For decentralized installation**
- **Code lock applicable from firmware 1E040F**
- **Tunable White usable from firmware 1E040F**

Technical Data

Connection:

Power supply:	230 VAC ±15%, 50/60 Hz optional 110 VAC
Power consumption:	< 0.5 W
Power connection:	5 wires 0,75 mm² (with insulated ferrules)
Connection sensor side:	T- and I-Port

Electronic outputs:

Load output:	Zero-voltage switch or phase-cut on dimmer
Resolution:	200 dimming levels
Max. load per output:	300 VA @ 230 V (cosφ = 1) 150 VA @ 110 V (cosφ = 1) (When installed in solid walls.) When installed in thermal insulated walls, max power is reduced. When installed in the same box as FI1 or NU16 the max power is reduced by 1/3, see installation manual.
Overload capacity:	1 kW max.10 s
Power dissipation:	1% of the apparent power, 4W full load
Minimum load:	none

General details:

Operating temperature:	-10 to 40 °C
Humidity:	max. 80% rel., non condensing
Environmental conditions:	Stationary installation according to VDE 632,VDE 637,
Degree of protection:	IP 20 when installed in a deep flush-mounted wall box

Dimensions:

LCN-UPP (Ø x H)	50 x 20 mm
Installation:	decentralized installation in deep flush-mounted box

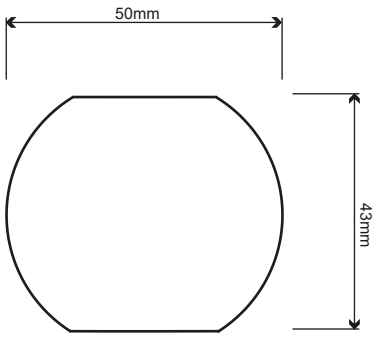

Circuit diagram:

Example: motor controller with relay LCN-R2U

Example: Dimming - suppressing filter LCN-FI1 being used

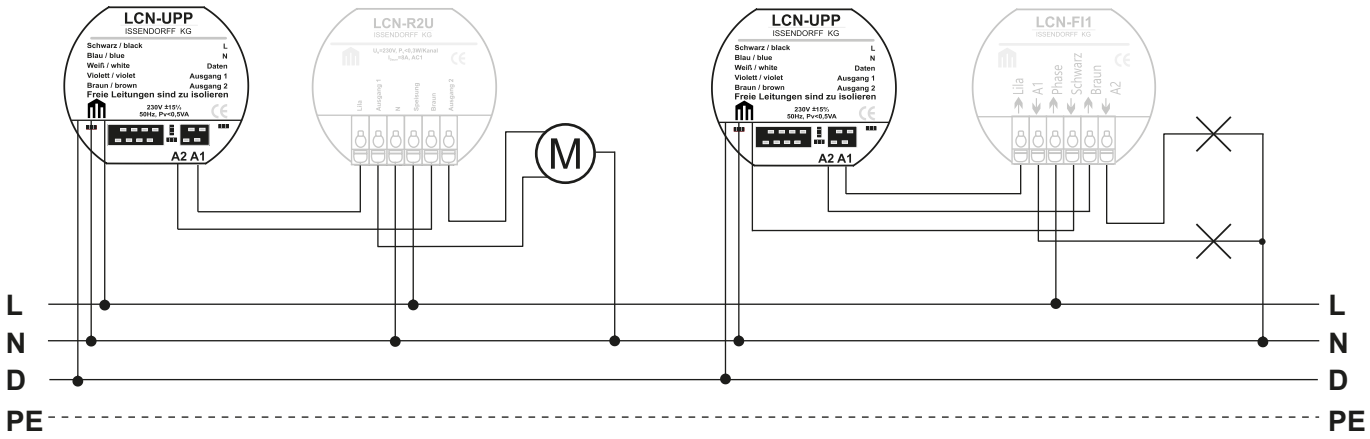

ISSENDORFF KG Magdeburger Str.3 30880 Laatzen - Germany Tel: +49 5066 99 80 www.LCN.eu

LCN-UPU

Universal switching and dimming module for leading and trailing edge dimming

The LCN-UPU is a sensor/actuator module for building automation with the LCN bus system. It has two switching/dimming electronic outputs for 230 Volt. The outputs can be operated as leading and trailing edge dimmer or in switching operation as a zero voltage switch. They each have timers, for choosing separate dimming ramps and switching times. Two further outputs are simulated and are not routed to the outside. Additional sensors and actuators can be connected through its T- and I-Ports. Parameters for the internal operating programme can be set using the system software LCN-PRO.

Application fields

- High grade theatre standard lighting control
- Control of solar shading and conservatories
- Individual room control: cooling, heating and ventilation
- Access control with IR remote control and transponder
- Automatic control with numerous timers and associated logical operations/processes
- Tableau/control panel installations with four LEDs and hierarchical logical operations for authorising and displaying
- Alarm systems with multiple zones and complex requirements, blocking locks, early warning alarm systems etc.
- Associated logical operations across installation/facility boundaries including:lighting « shade « alarm « access, etc. =high performance through the cost efficient use of multiple sensors and actuators.
- Note: All functions can used independently and are also available to be used simultaneously.

Hardware

- 230 Volt power supply 50/60 Hz, optionally 110 Volt
- Two electronic switch outputs 230 Volt, max. 300 VA, zero voltage switching or dimming in leading or trailing edge
- T-Port for connection of up to eight keys via key converter LCN- T8, LCN-TEx, or LCN-GT(S)12, LCN-GT(S)6 etc.
- I-Port for combined connection of LCN-RR IR remote-control receiver, LCN-TS temperature sensor, LCN-PMI motion detector, LCN-GUS indoor sensors, LCN-ULT transponder reader, LCN-GT(S)xD glass touch-keypad, LCN-BT4H/R push-button converter or binary input etc.

Note:
For dimming, the LCN-FI1 filter is required. When operating conventional motors with built-in limit switches, an LCN-R2U has to be used. For detailed information please refer to the installation guide..

Functional description

Four outputs, two of them are electronic outputs for switching, dimming, brightness and blending controls which can all be set individually. Two timing circuits 10 ms to 40 min allowing momentary timers, staircase lighting, etc. All four outputs have the possiblity for saving up to 100 light scenes, each saving brightness and blending time.

The LCN-UPU supports four DALI-groups through LCN-DDR. Additionally, all of the DALI elements can be directly controlled via the LCN-DDR. Connection for either eight conventional keys with adapter cable LCN-T8, four EnOcean radio switches LCN-T4ER or KNX/EIB standard sensor -keys LCN-TEx, e.g. fourfold = eight keys with three commands each being sent to two addresses, modules or groups. In total 32 keys in four tables = 192 commands to 64 target addresses. The keys support three functions: Short, Hold and Release.

Tableau/control panel functions for twelve lights with four states: On, Off, Flash and Flicker. Four logical operations for hierarchical fault signal processing in compliance with DIN. Decoding of the IR remote control receiver. Immediate evaluation or via a main computer. Functions for key levels, encrypted transmission, transmission distinction, transponder combinable, person identification. Decoding of the IR remote control receiver. Evaluation directly or via the LCN-GVS. Functions for key levels, coded transmission, transmitter differentiation, can be combined with transponder, person recognition.

Further functions:
- Two freely parametrable continuous action controllers. Results and any variables can be distributed on the bus.
- Analogue value data processing over four thresholds with hysteresis; can also be used for controlling, counting/calculating.
- Transponder data processing of up to 16 transponders, unlimited number with use of the visualisation software LCN-GVS.
- Code lock functions with LCN-GT6, -GT8 and GT12
- Control with independent and logical operations, single key locking and unlocking, hierarchical switch authorisation.
- Four timers 1 s to 45 days, two timers relay periodic clock.
- Override during power failure for up to 20 seconds with power failure recognition.
- Twelve variables.
- The execution is uniquely confirmed.
- Automatic generation of real status messages for visualization.

LCN-UPU

Universal switching and dimming module for leading and trailing edge dimming

- **Sensor/actuator module**
- **Two switching/dimming electronic outputs at 230 V, 300 VA**
- **Leading and trailing edge dimming**
- **Two simulated outputs**
- **T- and I-ports**
- **decentralized installation**
- **Code lock applicable from firmware 1E040F**
- **Tunable White usable from firmware 1E040F**

Technical Data

Connection

Power supply:	230 VAC ±15%, 50/60 Hz optional 110 VAC
Power consumption:	< 0.5W
Power connection:	5 wires with insulated ferrules 0.75 mm²
Connection sensor side:	T- and I-Port

Electronic outputs

Load output:	2 x Zero voltage switch or phase cut on dimmer
Resolution:	200 steps in dimming operation
Switching capacity:	300 VA (cos φ = 1) for solid walls, each 150 VA with full thermal insulation
Overload capacity:	each 1 kW max.10 s
Power dissipation:	1% from the apparent power
Minimum load:	none

General details:

Operating temperature:	-10 to 40 °C
Humidity:	max. 80% rel., non condensing
Environmental conditions:	stationary installation according to VDE 632, VDE 637
Degree of protection:	IP 20

Dimensions:

LCN-UPU (Ø x H)	50 x 20 mm
Installation:	decentralized installation in a deep flush-mounted box

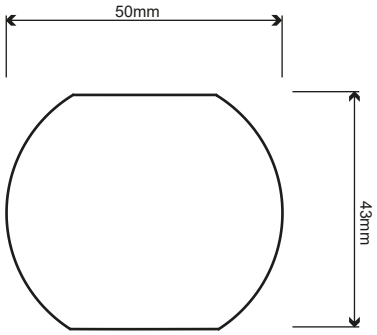

Circuit diagram:

Example: leading edge dimming

Example: trailing edge dimming, the LCN-FI1 filter is required!

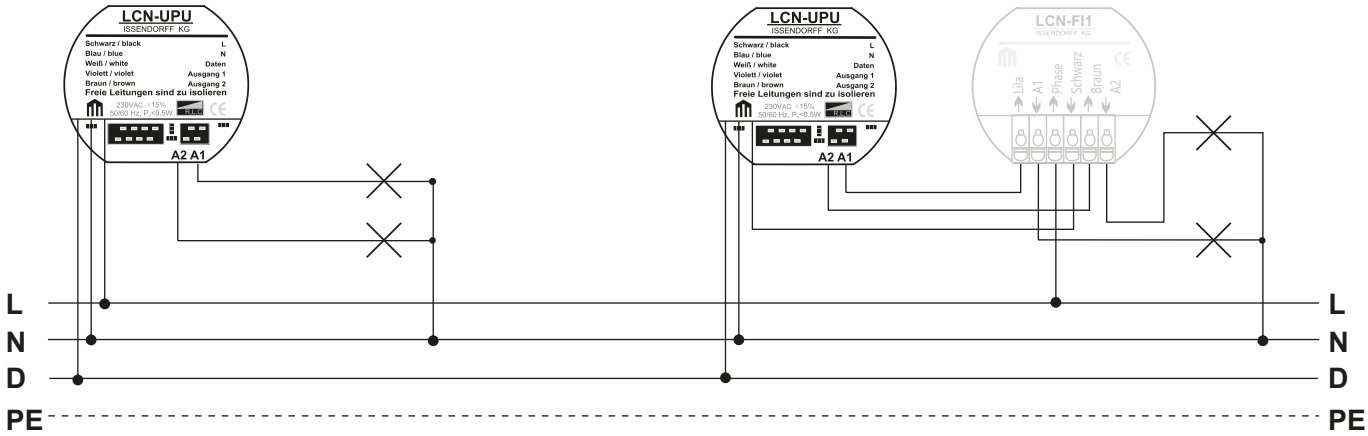

ISSENDORFF KG Magdeburger Str.3 30880 Laatzen - Germany Tel: +49 5066 99 80 www.LCN.eu

LCN-UMR

Universal shutter/blind module for flush-mounting

The universal shutter module LCN-UMR is a sensor/actuator module for a roller shutter motor control. It has two switchable, interlocked 230 Volt relay outputs. Furthermore, the LCN-UMR has T- and I-ports for connecting further LCN sensors and actuators. The internal operating program can be programmed by the LCN system software LCN-PRO.

Application fields

- Control of roller shutters and blinds motors
- Control of shading and air-conditioning
- Decentralized control of screens or partitions
- Individual room control: Cooling, heating, ventilation
- Control with IR remote and transponder
- Automatic control with many timers and links
- Tableau systems with four states/LEDs and hierarchical relationships of permissions
- Alarm systems, also with multiple zones and complex conditions, block lock, prealarm, etc.
- Links over trade boundaries: Lighting „shading“ Alarm „entry, etc.= High functionality with cost-effective multiple use of sensors and actuators

Hardware

- 230 Volt power supply 50/60 Hz, 110 VAC version available
- Two relays 230 Volt/5 Amps interlocked
- T-Port for connection of up to eight keys via key converter LCN-T8, LCN-TEx or LCN-GT(S)12, LCN-GT(S)6 etc.
- I-Port for combined connection of LCN-RR IR remote control receiver, LCN-TS temperature sensor, LCN-PMI motion detector, LCN-GUS indoor sensors, LCN-ULT transponder reader, LCN-GT(S)xD glass touch keypads, LCN-BT4H/R push-button converter or binary input etc.

Note:
The module has no protection for the outputs. Therefore, a circuit breaker 6A (B characteristic) is to be used. For detailed information, please refer to the installation guide.

Functional description

Operating programs:
Two switchable, interlocked 230 Volt relay outputs. The module does not switch the outputs or optionally open after 70 or 140 seconds. Connection for either conventional eight keys with adapter cable LCN-T8 or KNX/EIB standard touch sensors LCN-TEx, e. g. 4 x = 8 keys each with three commands to each two addresses, modules or groups. A total of 32 keys in 4 tables = 192 commands to 64 targets. The keys support three commands: Short, Hold and Release. Tableau functions for twelve lamps with four states: on, off, blinking, flickering. Four logic operations for hierarchical alarm processing according DIN. Decodes the IR remote control receiver. Evaluation directly or through the central computer. Functions for key levels, encrypted transmission, transmitter differentiation, with transponder combined, person recognition.

More functions:
- Two freely programmable continuous controller. Readings and control variables can be arbitrarily distributed in the bus.
- Analog value processing via switching thresholds or regulators.
- Transponder data processing for up to 16 transponders, unlimited with operation of visualization when operating with the visualisation LCN-GVS.
- Code lock functions with LCN-GT6, -GT8 and GT12
- Control with dependencies and linkages, blocking and releasing of individual key/tactile hierarchical permissions.
- Four timers 1 s to 45 days, two timers relay, periodic timer.
- Bridging power failures up to 20 seconds with power failure detection.
- Four level acknowledgment and reporting.
- Twelve variables.
- The execution is uniquely confirmed.
- Automatic generation of real status messages for visualization.

LCN-UMR

Universal shutter/blind module for flush-mounting

- **Shutter-/roller blind sensor module**
- **2 x relays 230 Volts, each 5 A**
- **Functions similar to the LCN-UPP/LCN-UPU**
- **With T-Port and I-Port connections**
- **For decentralized installation**
- **Code lock applicable from firmware 1E040F**
- **Roller shutters and slat positioning (from firmware 1F0302)**

Technical Data

Connection:

Power supply:	230 VAC ±15%, 50/60 Hz optional 110 VAC
Power consumption:	< 0.5 W
Power connection:	Strand wires 0.75 mm² (with insulated ferrules)
Connection sensor side:	T- and I-Port

Outputs

Typ:	2 relays, 5 A, interlocked
Mechanical life:	10,000 switching cycles
Switching capacity:	recommended max. 800 W
Inrush current:	max. 50 A, 8/10 µs

General details:

Operating temperature:	-10 to 40 °C
Humidity:	max. 80% rel., non condensing
Environmental conditions:	Stationary installation according to VDE 632,VDE 637,
Degree of protection:	IP 20 when installed in a deep flush-mounted wall box

Dimensions:

LCN-UMR (Ø x H)	50 x 20 mm
Installation:	decentralized installation in a deep flush-mounted box

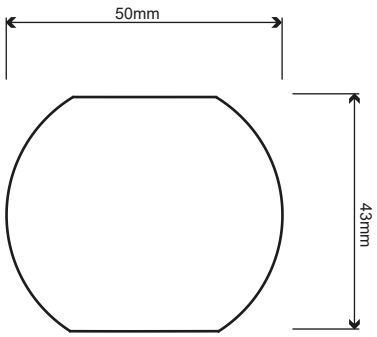

Circuit diagram:

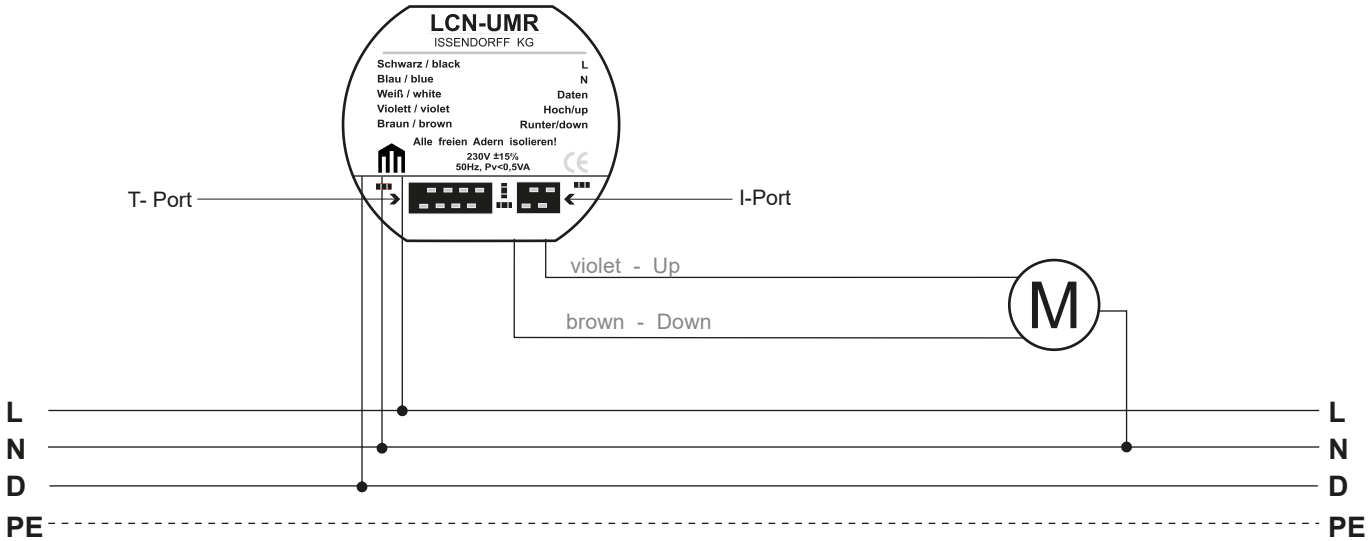

LCN-UMR24

Universal shutter/blind module 24 Volt for flush-mounting

The universal shutter module LCN-UMR24 is a sensor/actuator module for a roller shutter motor control. It has two switchable 230 Volt relay outputs. Furthermore, the LCN-UMR24 has T- and I-ports for connecting further LCN sensors and actuators. The internal operating program can be programmed by the LCN system software LCN-PRO.

Application fields

- Control of roller shutters and blinds motors
- Control of shading and air-conditioning
- Decentralized control of screens or partitions
- Individual room control: Cooling, heating, ventilation
- Control with IR remote and transponder
- Automatic control with many timers and links
- Tableau systems with four states/LEDs and hierarchical relationships of permissions and ads
- Alarm systems, also with multiple zones and complex conditions, block lock, prealarm, etc.
- Links over trade boundaries: Lighting „shading“ Alarm „entry, etc.= High functionality with cost effective multiple use of sensors and actuators

Hardware

- Two relays 230 Volt/5 Amps
- T-Port for connection of up to eight keys via key converter LCN-T8, LCN-TEx, LCN-TU4R or LCN-R1U relay, LCN-GT(S)12, LCN-GT(S)6 etc.
- I-Port for combined connection of LCN-RR IR remote control receiver, LCN-TS temperature sensor, LCN-PMI motion detector, LCN-GUS indoor sensors, LCN-ULT transponder reader, LCN-GT(S)xD glass touch keypad, LCN-BT4H/R push-button converter or binary input etc.

Note:
For detailed information, please refer to the installation guide.

Functional description

Operating programs
Two switchable, independently usable 230 Volt, 5 Ampere relay outputs. The module switches off the outputs either not at all or after 70 or 140 seconds. The LCN-UMR24 supports four DALI groups via LCN-DDR. In addition, all DALI devices can be controlled directly via the LCN-DDR.

Connection for eight conventional keys with LCN-T8 adapter cable. A total of 32 keys in four tables result in 192 commands to 64 destinations. The keys support three functions: Short, hold and release.

Tableau functions for twelve LED`s with four states: On, Off, Flashing, Flickering. Four logical links for hierarchical error message processing according to DIN.

Decoding of the IR remote control receiver. Evaluation directly or via the LCN-GVS. Functions for key levels, encrypted transmission, transmitter differentiation, can be combined with transponder, person recognition.

Further functions
- Two freely parametrizable continuous controllers. Measured values and manipulated variables can be distributed anywhere on the bus.
- Analog value processing via threshold values or controller.
- Transponder data processing for up to 16 transponders, unlimited when operating the visualisation LCN-GVS.
- Code lock functions with LCN-GT6, -GT8 and GT12
- Control with dependencies and links, locking and releasing individual keys, hierarchical key authorisations.
- Four timers 1 second to 45 days, two timers, periodic timer.
- Bridging of power failures up to 20 seconds with power failure detection.
- Four-stage acknowledgement and reporting system.
- Twelve variables.
- Function acknowledgement: the execution is clearly confirmed.
- Automatic generation of real status messages for visualisation.

LCN-UMR24

Universal shutter/blind module 24 Volt for flush-mounting

- **Shutter-/roller blind sensor module**
- **2 x relays 230 Volts, each 5 A**
- **Functions similar to the LCN-UPP/LCN-UPU**
- **With T-Port and I-Port connections**
- **For decentralized installation**
- **Code lock applicable from firmware 1E031E**

Technical Data

Connection:

Power supply:	20 to 30 VAC, 50/60 Hz
Power consumption:	< 0.5 W
Power connection:	5 wires 0.75 mm² (with insulated ferrules)
Connection sensor side:	T- and I-Port

Outputs

Type:	2 relays 5 A, interlocked
Mechanical life:	10,000 switching cycles
Switching capacity:	recommended max. 800 W
Inrush current:	max. 50 A 8/10 µs

General details:

Operating temperature:	-10 to 40 °C
Humidity:	Sträfling max. 80% rel., non condensing
Environmental conditions:	Stationary installation according to VDE 632,VDE 637,
Degree of protection:	IP 20 when installed in a deep flush-mounted box

Dimensions:

LCN-UMR24 (Ø x H)	50 x 20 mm
Installation:	decentralized installation in a deep flush-mounted box

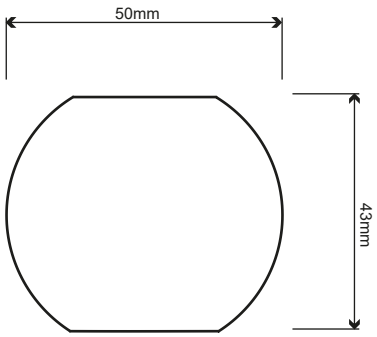

Circuit diagram:

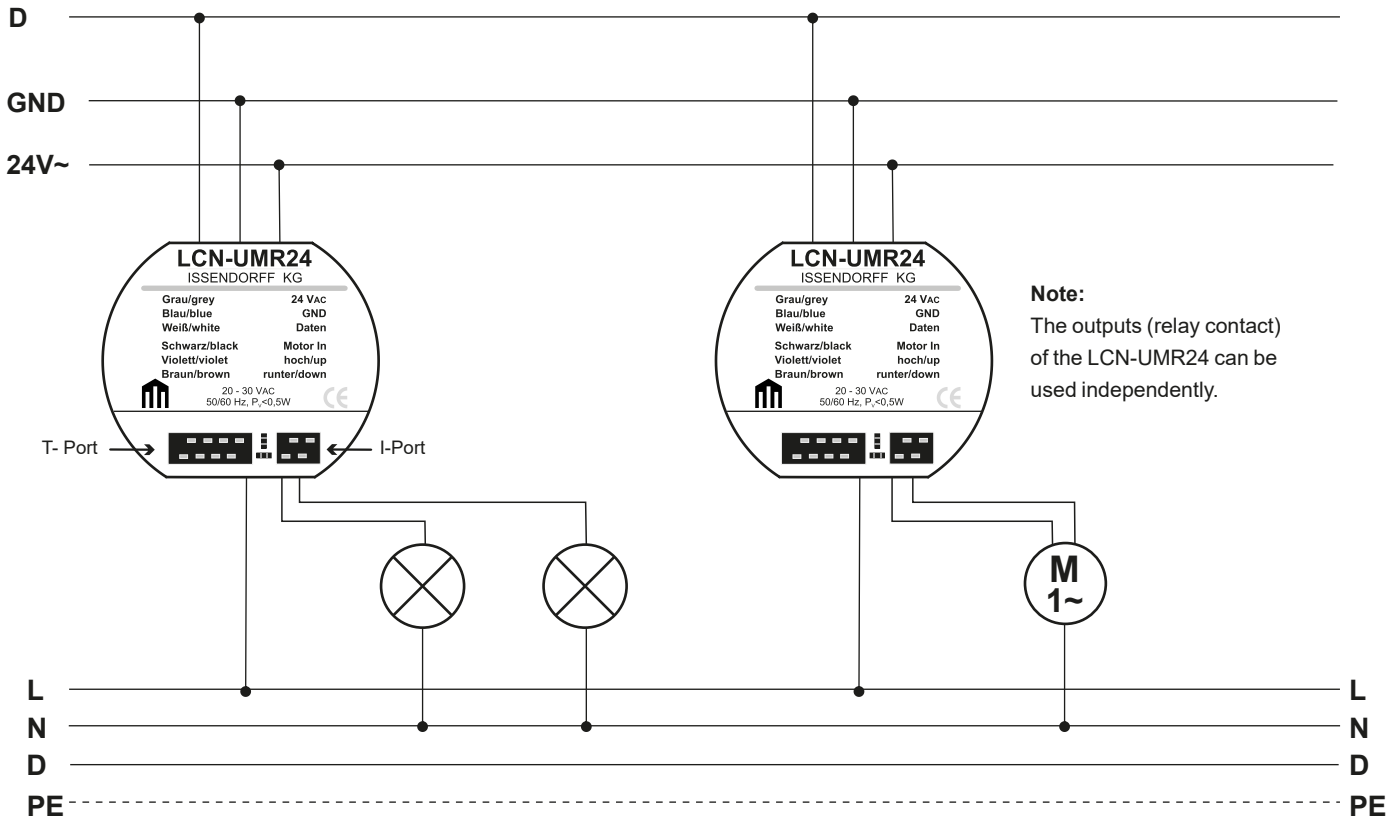

Note:
The outputs (relay contact) of the LCN-UMR24 can be used independently.

LCN-UMF

Universal shutter/blind module with binary input for flush mounting

The LCN-UMF shutter module is a sensor-actuator module for controlling shutter/blind motors. It has two switchable, mutually interlocked 230 Volt relay outputs. In addition, there are 3 binary inputs for potential-free contacts, with which e.g. window contacts can be integrated.

The internal operating program can be freely parameterized using the LCN system software LCN-PRO. The LCN-UMF is installed decentrally in deep switch, distribution or electronics boxes.

Application fields

- Control of roller shutters and blinds motors
- Control of roller shutter and blind motors.
- Control of shading and ventilation systems.
- Decentralized control of screens or partitions.
- Automatic controls with many timers and links.
- Alarm systems, even with multiple zones and complex conditions, block lock, pre-alarm, etc.
- Note: All functions can be used independently and are therefore available simultaneously.

Hardware

- 230 Volt power supply 50/60Hz, optional 110 V~
- Two relays 230 Volt each 5 Ampere, interlocked against each other
- 3 binary inputs for potential-free contacts

Functional description

Operating programs
Two switchable 230 volt interlocked 5 amp relay outputs each.

Optional shutdown of outputs 70 seconds or 140 seconds after last run command.

Further functions
- 12 variables for the acquisition of measured values
- Analog value processing via thresholds or controllers.
- Two freely parameterizable continuous controllers. Measured values and manipulated variables can be distributed in the bus as required.
- Control with dependencies and links, blocking and enabling of individual keys, hierarchical authorizations.
- Four timers (1 second to 45 days), two timers, periodic timer.
- Function acknowledgement: execution is confirmed unambiguously
- Automatic generation of real status messages for visualization.
- Four-level acknowledgement and reporting system.
- Bridging of power failures up to 20 seconds with power failure detection.

Note:
For detailed information, please refer to the installation guide.

LCN-UMF

Universal shutter/blind module with binary input for flush mounting

- **Shutter-/roller blind sensor module**
- **2 x relays 230 Volts, each 5 A**
- **3 binary inputs for potential-free contacts**
- **For decentralized installation**

Technical Data

Connection:

Power supply:	230 VAC ±15%, 50/60 Hz optional 110 VAC
Power consumption:	< 0.5 W
Power connection:	Strand wires 0.75 mm² (with insulated ferrules)
Binary input connection:	3 binary inputs for potential-free contacts, solid or multi-core 0,14 - 0,5 mm, with wire end ferrule 0,25 - 0,34 mm.

Max. 5 m cable length and the installation not in the same channel/pipe as 230 V cables!

Outputs

Typ:	2 relays, 5 A, interlocked
Mechanical life:	10,000 switching cycles
Switching capacity:	recommended max. 800 W
Inrush current:	max. 50 A, 8/10 µs

General details:

Operating temperature:	-10 to 40 °C
Humidity:	max. 80% rel., non condensing
Environmental conditions:	Stationary installation according to VDE 632,VDE 637,
Degree of protection:	IP 20 when installed in a deep flush-mounted wall box

Dimensions:

LCN-UMR24 (Ø x H)	50 x 20 mm
Installation:	decentralized installation in a deep flush-mounted box

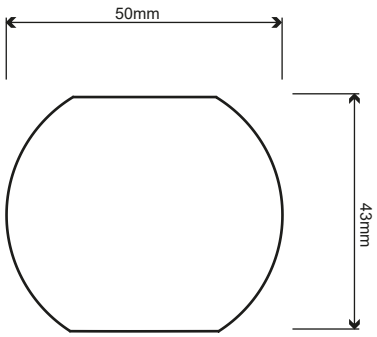

Circuit diagram:

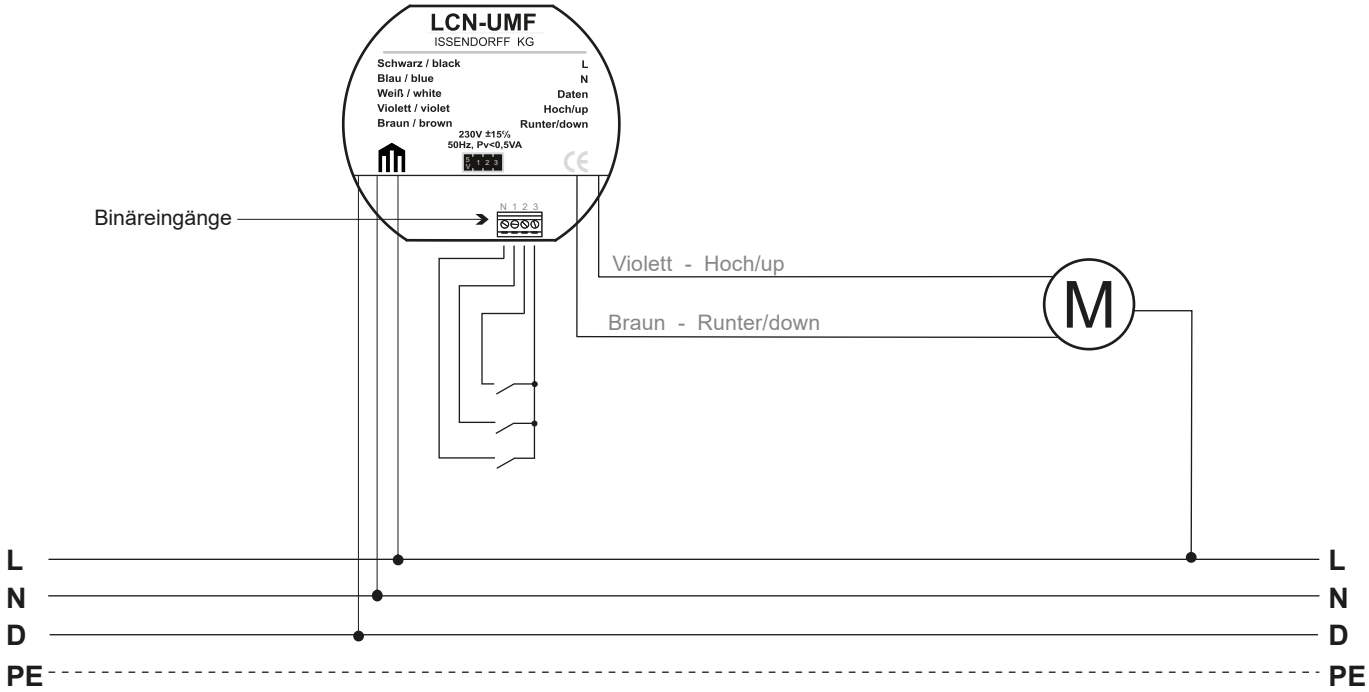

ISSENDORFF KG Magdeburger Str.3 30880 Laatzen - Germany Tel: +49 5066 99 80 www.LCN.eu

LCN-UPS

Universal sensor module for flush mounting

The LCN-UPS module is a sensor module for the LCN Bus system. It has four simulated outputs of which two can be used for DSI applications or all four for DALI in connection with the LCN-DDR. Furthermore, additional sensors and actuators can be connected through its T and I ports. Parameters for the internal operating programme can be set using the system software LCN-PRO. The module is decentrally installed in a wall cavity using flush mounted switch or junction boxes.

Application fields

- Connection of LCN sensors and KNX push-button key sensors or EnOcean wireless sensor keys.
- Individual room control: cooling, heating and ventilation.
- Access control with IR remote control and transponder.
- Automatic control with numerous timers and associated logical operations/processes.
- Tableau/control panel installations with four LED states and hierarchical logical operations for authorising and displaying.
- Alarm systems with multiple zones and complex requirements, blocking locks, early warning alarm systems etc.
- Associated logical operations across installation/facility boundaries including: lighting ‹-› shade ‹-› alarm ‹-› entry, etc = high performance through the cost efficient use of multiple sensors and actuators.

All functions can used independently and are also available to be used simultaneously.

Hardware

- 230 Volt power supply for 50/60 Hz, optional 110 Volt
- T-Port for connection of up to eight keys via key converter LCN- T8, LCN-TEx, or LCN-GT12, LCN-GT6 etc.
- I-Port for combined connection of LCN-RR IR remote control receiver, LCN-TS temperature sensor, LCN-PMI motion detector, LCN-GUS indoor sensors, LCN-ULT transponder reader, LCN-GTxD glass touch keypad, LCN-BT4H/R push button converter or binary input etc.

Note:
Modification of the LCN-UPS for Merten Trancent (6231 90) is to be stated when ordering.

Functional description

Operating programs
Four simulated outputs: three timers for 10 milliseconds to 40 minutes enable short-time timers, staircase lighting and other functions. Each of the four simulated outputs provides 100 light scene memories, each of which saves brightness and ramp.

The LCN-UPS supports four DALI groups via LCN-DDR. In addition, all DALI participants can be controlled directly via the LCN-DDR.

Connection for eight conventional keys with adapter cable LCN-T8. 32 keys in four tables result in 192 commands to 64 targets. The keys support three functions: Hit, hold and release.

LCN tableau functions with four states: On, Off, Flashing, Flickering. Four total processing functions with twelve inputs for logic operations and hierarchical error message processing according to DIN.

Decoding of the IR remote control receiver. Evaluation directly or via the LCN-GVS. Functions for key levels, coded transmission, transmitter differentiation, can be combined with transponder, person recognition.

Further functions :
- Two freely parametrable continuous action controllers. Results and any variables can be distributed on the bus.
- Analogue value data processing over four thresholds with hysteresis; can also be used for controlling, counting/calculating.
- Transponder data processing for up to 16 transponders, unlimited number with use of the visualisation software LCN-GVS.
- Code lock functions with LCN-GT6, -GT8 and GT12
- Control with independent and logical operation, single key locking and unlocking, hierarchical authorisation.
- Four timers 1 s to 45 days, two timers relay, periodic clock.
- Override during power failure for up to 20 seconds with power failure recognition.
- Four level acknowledgement and notification system.
- Function reporting and status notification.
- Twelve variables.
- Function acknowledgement: the execution is clearly confirmed.
- Automatic generation of real status messages for visualisation.

LCN-UPS

Universal sensor module for flush mounting

- **Four simulated outputs**
- **With T-Port and I-Port connections**
- **For decentralized installation**
- **Code lock applicable from firmware 1E040F)**

Technical Data

Connection:

Power supply:	230 VAC ±15%, 50/60 Hz optional 110 VAC
Input power	< 0.4 W power consumption
Power connection:	Strand 5 wires 0.75 mm² (with insulated ferrules)
Connection sensor side:	T- and I-Port

Electronic outputs:

Type:	Four simulated outputs - virtually usable

General details:

Operating temperature:	-10 to 40 °C
Humidity:	Max. 80% rel., Non condensing
Environmental conditions:	Stationary installation according to VDE 632,VDE 637
Degree of protection:	IP 20, when installed in deep flush-mounted boxes

Dimensions:

LCN-UPS (Ø x H)	50 x 12 mm
Installation:	decentralized installation in a deep flush-mounted box

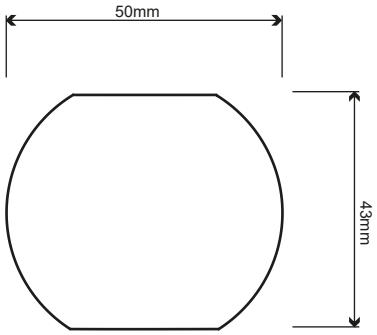

Circuit diagram:

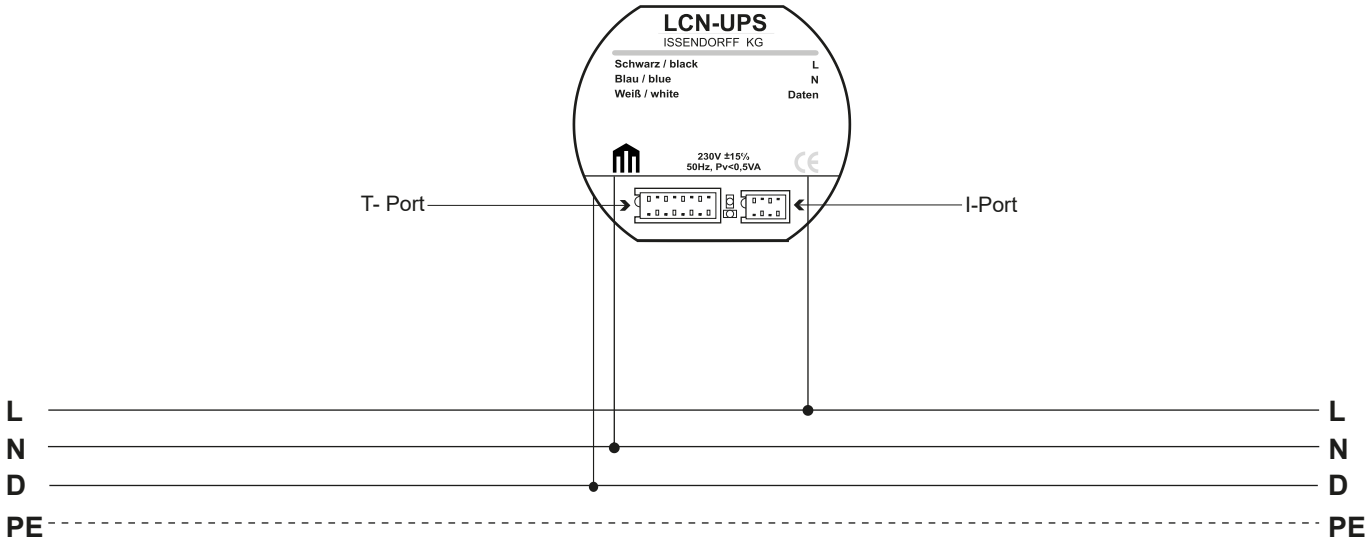

LCN-UPS24

Universal sensor module 24 Volt for flush mounting

The LCN-UPS24 flush-mounted module is a sensor module. It is installed in dry rooms in flush-mounted electronic boxes directly behind buttons, sockets, etc. Also the Installation in junction boxes is possible. The module has a Sensor input (T Port), to which e. g. conventional, LCN-GTx buttons or further peripherals can be connected. Additionally the I Port is available which offers many functions, e. g. IR receiver, LCN-GT keypads, sensors, EnOcean transceiver.

Application fields

- Connection of LCN sensors and KNX push-button key sensors or EnOcean wireless sensor keys.
- Individual room control: cooling, heating and ventilation.
- Access control with IR remote control and transponder.
- Automatic control with numerous timers and associated logical operations/processes.
- Tableau/control panel installations with four LED states and hierarchical logical operations for authorising and displaying.
- Alarm systems with multiple zones and complex requirements, blocking locks, early warning alarm systems etc.
- Associated logical operations across installation/facility boundaries including: lighting ‹-› shade ‹-› alarm ‹-› entry, etc = high performance through the cost efficient use of multiple sensors and actuators.

All functions can used independently and are also available to be used simultaneously.

Hardware

- 20-30 Volt~, 50/60 Hz
- T Port for connection of up to eight keys via key converter LCN- T8, LCN-TEx, or LCN-GT12, LCN-GT6 etc.
- I Port for combined connection of LCN-RR IR remote control receiver, LCN-TS temperature sensor, LCN-PMI motion detector, LCN-GUS indoor sensors, LCN-ULT transponder reader, LCN-GTxD glass touch keypad, LCN-BT4H/R push button converter or binary input etc.

Note:
Despite its extensive functionality the LCN system is a unprecedentedly easy to install and program System: It remains in the world of the electrician. Nevertheless.Training required for every electrician who installs this system.

Functional description

Operating programs
Four simulated outputs: three timers for 10 milliseconds to 40 minutes enable shorttime timers, staircase lighting and other functions. Each of the four simulated outputs provides 100 light scene memories, each of which saves brightness and ramp.

The LCN-UPS supports four DALI groups via LCN-DDR. In addition, all DALI participants can be controlled directly via the LCN-DDR.

Connection for eight conventional keys with adapter cable LCN-T8. 32 keys in four tables result in 192 commands to 64 targets. The keys support three functions: Hit, hold and release.

LCN tableau functions with four states: On, Off, Flashing, Flickering. Four total processing functions with twelve inputs for logic operations and hierarchical error message processing according to DIN.

Decoding of the IR remote control receiver. Evaluation directly or via the LCN-GVS. Functions for key levels, coded transmission, transmitter differentiation, can be combined with transponder, person recognition.

Further functions :
- Two freely parametrable continuous action controllers. Results and any variables can be distributed on the bus.
- Analogue value data processing over four thresholds with hysteresis; can also be used for controlling, counting/calculating.
- Transponder data processing for up to 16 transponders, unlimited number with use of the visualisation software LCN-GVS.
- Code lock functions with LCN-GT6, -GT8 and GT12
- Control with independent and logical operation, single key locking and unlocking, hierarchical authorisation.
- Four timers 1 s to 45 days, two timers relay, periodic clock.
- Override during power failure for up to 20 seconds with power failure recognition.
- Four level acknowledgement and notification system.
- Function reporting and status notification.
- Twelve variables.
- Function acknowledgement: the execution is clearly confirmed.
- Automatic generation of real status messages for visualisation.

LCN-UPS24

Universal sensor module 24 Volt for flush mounting

- **With T Port and I Port connections**
- **For decentralized installation**
- **Code lock applicable from firmware 1E031E**

Technical Data

Connection:

Power supply:	20-30 VAC~, 50/60 Hz
Input power	< 0.4 W
Power connection:	via terminals, can be looped through
Connection sensor side:	T and I Port

Electronic outputs:

Type:	- None - (four outputs used virtually)

General details:

Operating temperature:	-10 to 40 °C
Humidity:	Max. 80% rel., Non condensing
Environmental conditions:	Stationary installation according to VDE 632,VDE 637
Degree of protection:	IP 20, when installed in deep flush-mounted boxes

Dimensions:

LCN-UPS24 (Ø x H)	50 x 12 mm
Installation:	decentralized installation in a deep flush-mounted box

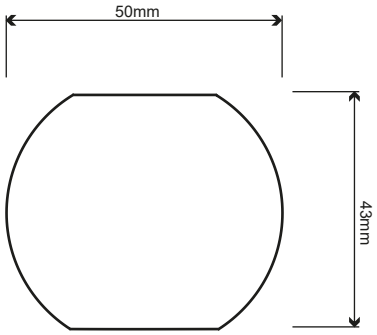

Circuit diagram:

24V AC connection. The illustration shows the standard version with galvanic isolation via LCN-IS2/24:

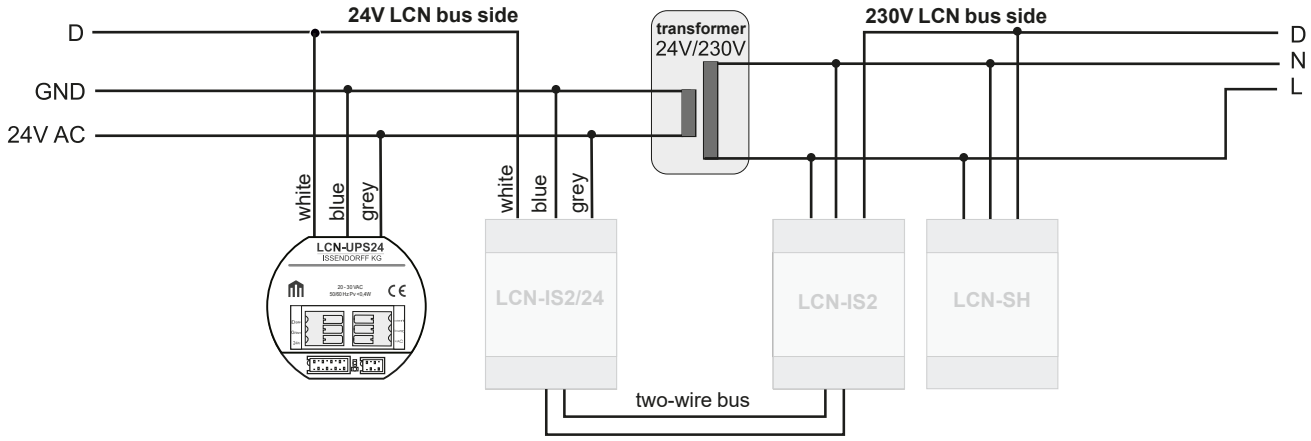

Note:
LCN-UPS24 generate levels on the data wire which are compatible to the levels of the 230V modules. It is therefore also possible to connect the buses directly.

LCN-SH

Universal switching and dimming module for DIN rail mounting

The LCN-SH DIN rail mounted module is a sensor/actuater module for the LCN Bus system. It has two switching/dimming electronic outputs at 230 Volt. Furthermore, additional sensors and actuators can be connected through its T-, P- and I-ports. Parameters for the internal operating program can be set using the system software LCN-PRO. The module is usually mounted on a DIN Rail inside the distribution box; direct mounting is also possible.

Application fields

- Theatre standard high grade lighting control, sophisticated lighting effects and daylight dependent lighting control.
- Control of solar shading and conservatories, with up to four motor pairs with LCN-R4M2H.
- Individual room control: cooling, heating and ventilation.
- Access control with IR remote control and transponder.
- Automatic control with numerous timers and associated logical operations/processes.
- Hierarchical logical operations and authorisation.
- Alarm systems with multiple zones and complex requirements, blocking locks, early warning alarm systems etc.
- Associated logical operations across installation/facility boundaries including: visualisation, ‹-› alarm ,‹-› entry restriction, etc
- High performance through cost effective multiple application of sensors and actuators.

Note: All functions can be used independently and can also be used simultaneously.

Hardware

- 230 Volt power supply unit 50/60 Hz, optional 110 Volt.
- T-Port for connection of up to eight keys via key converter LCN-T8, LCN-TEx or for connection of LCN-GT12, LCN-GT6 and others
- I-Port for the operation of LCN-RR IR remote control receiver, LCN-TS temperature sensor, LCN-PMI motion detector, LCN-GUS interior sensors, LCN-ULT transponder reader, LCN-GT(S)xD glass info modules, LCN-BT4H/R binary push-button sensor and others
- P-Port as digital input/output for expansions such as the relays LCN-R4M2H or LCN-R2H, LCN-BS4. Current sensors and others

Note:
For control/activation of external relays via the electronic outputs, the internal suppression of radio interference can be switched off using the micro switch or a base load module LCN-C2GH is required. Care must be taken to the holding current from conventional relays. For detailed instructions please refer to the Instalation guide. Operating an LCN-R1U or an LCN DDR is not possible.

Functional description

Four outputs, two of which are electronic outputs for switching, dimming, brightness and blending control which can all be set individually. Two timing circuits 10 ms to 40 min enabling momentary timers, staircase lighting, etc.

All four outputs are capable of saving up to 100 light scenes, each saving brightness and blending time. Motor position control with drive limit switches. Connection for eight keys with adapter cable LCN-T8 which can distinguish between the Short, Hold and Release functions: each of the three commands can be sent to two addresses, modules or groups. In total 32 keys in four tables = 192 commands to 64 target addresses.

LCN tableau/control panel functions with four states: On, Off, Flashing and Flickering. Four summing operations, each with twelve inputs for logical operations and hierarchal fault signal processing in compliance with DIN. Decoding of the IR receiver. Direct evaluation or via main computer. Functions for key levels, encrypted transmission, transmission distinction, transponder evaluation of serial numbers, person identification.

Further functions:
- Two freely parametrable continuous action controllers. Results and any variables can be distributed on the bus.
- Analogue value data processing over four thresholds with hysteresis; can also be used for control, counting/calculating.
- Transponder data processing for up to 16 transponders (unlimited number when using visualisation software LCN-GVS).
- Code lock functions with LCN-GT6, -GT8 and GT12
- Control with independent and logical operation, single key locking and unlocking, hierarchical authorisation.
- Four timers (1s.. 45 days), 2 relay timers, periodic clock.
- Override during power failure for up to 20 seconds with power failure recognition.
- Four level reporting and acknowledgement
- Function reporting: execution of commands are clearly confirmed.
- Automatic creation of status reporting for the visualization.

LCN-SH

Universal switching and dimming module for DIN rail mounting

- **Combined sensor-/actuator module with two dimming outputs 230 Volts, 300 VA**
- **Two further simulated outputs**
- **Dimmable as leading edge or as switch**
- **Controls 160 target addresses with max. 480 functions**
- **Code lock applicable from firmware 1E040F**
- **Tunable White usable from firmware 1E040F**

Dimensions:

LCN-SH (W x H x D)	37 x 92 x 66,5 mm 61,5 mm via DIN rail
Space requirement:	2 DU
Installation:	on 35 mm mounting rail (DIN 50022)

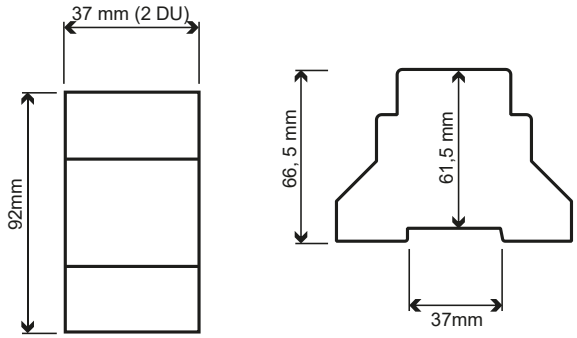

Technical Data

Connection:

Power supply:	230 VAC ±15%, 50/60 Hz optional 110 VAC
Input power	< 0.5 W power consumption
Terminals:	Screwless, max. 16 A
Wire type:	Solid or multi core max. 2.5 mm² or with insulated ferrules 1.5 mm²
Connection sensor side:	T-, I- and P-Port

Electronic outputs:

Load output:	Zero-voltage switching or phase cut-on dimmer
Resolution:	200 dimming levels
Switching capacity:	300 VA @ 230 V, cosφ = 1
Heat dissipation	1% of thev apparent power Max. 6 W full load
Overload capacity:	1 kW max.10 s
Minimum load:	none
Fuse for both outputs:	3.15 AF

General details:

Operating temperature:	-10 to 40 °C
Humidity:	Max. 80% rel., no condensing
Environmental conditions:	Stationary installation according to VDE 632,VDE 637
Degree of protection:	IP 20

Circuit diagram:

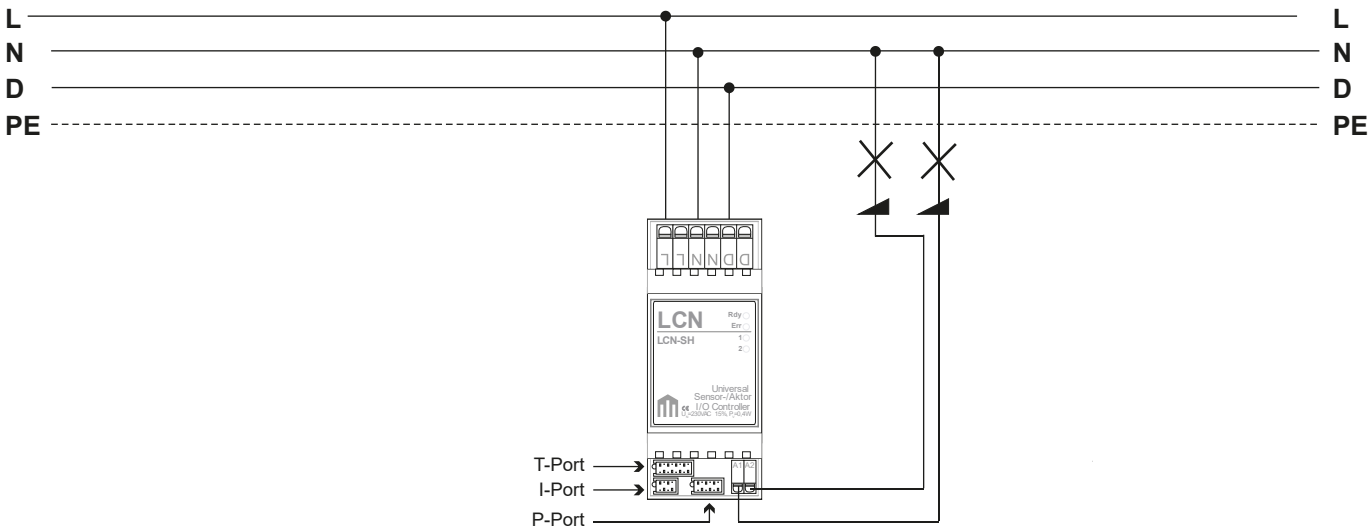

LCN-SHS | LCN-ESS

Universal sensor module for DIN rail mounting | Sensor module for screw mounting

The LCN-SHS/-ESS module is a sensor module for the LCN bus system. Functionally, it corresponds to the LCN-SHS/-ESS but does not have any electronic dimmer outputs. Sensors and actuators can be connected through its T-, I- and P- ports. Parameters for the internal operating program can be set using the system software LCN-PRO.

Application fields

- Cost effective linkage of all LCN sensors and actuators for distribution integration such as key converters like LCN-TL12H or binary sensors like LCN-BT4H.
- Control of solar shading for conservatories, with up to four motor pairs with LCN-R4M2H.
- Access control with IR remote control and transponders.
- Automatic control with numerous timers and logical operations.
- Hierarchical logical operations and authorisation.
- Alarm systems with multiple zones and complex requirements, blocking locks, early warning alarm systems etc.
- Associated logical operations across installation/facility boundaries including: lighting‹-› solar shading ‹-› alarm ‹-› entry restriction, etc.
- High performance through cost effective multiple application of sensors and actuators.

All functions can used independently and are also available to be used simultaneously.

Hardware

- 230 Volt power supply unit 50/60 Hz, optional 110 Volt
- T-Port for connection of up to eight keys via key converter LCN-T8, LCN-TEx or for connection of LCN-GT(S)12, LCN-GT(S)6 and others
- I-Port for the operation of LCN-RR IR remote control receiver, LCN-TS temperature sensor, LCN-PMI motion detector, LCN-GUS interior sensors, LCN-ULT transponder reader, LCN-GT(S)xD glass info modules, LCN-BT4H/R binary push-button sensor and others
- P-Port as digital input/output for expansions such as the relays LCN-R4M2H or LCN-R2H, LCN-BS4 current sensors and further

Note:
All functions can be used independently and are therefore available simultaneously. For detailed information please refer to the installation instructions. The operation of LCN-R1U and LCN-DDR is not possible

Functional description

Connection for eight keys with key converter which can distinguish between the Short, Hold and Release functions: each of the three commands can be sent to two addresses, modules or groups. In total 32 keys in 4 tables = 192 commands to 64 target addresses. Four simulated outputs: three timers 10 ms to 40 min allowing momentary timers, staircase lighting etc. All four outputs are capable of saving up to 100 light scenes, each saving brightness and blending time. Position control for motors including drive limit.

LCN tableau/control panel functions with four states: On, Off, Flashing and Flickering. Four summing operations each with twelve inputs for logical operations and hierarchal fault signal processing in compliance with DIN. Decoding of the IR receiver. Immediate evaluation or via main computer. Functions for key levels, encrypted transmission, transmission distinction, transponder combinable, person identification.

Further functions :

- Two freely parametable continuous action controllers. Results and any variables can be distributed on the bus.
- Analogue value data processing over four thresholds with hysteresis, can also be used for controlling, counting/calculating.
- Transponder data processing for up to 16 transponders, unlimited number when using the visualisation software LCN-GVS.
- Code lock functions with LCN-GT6, -GT8 and GT12
- Control with independent and logic operation, single key locking and unlocking, hierarchical authorisation.
- Four timers 1 s to 45 days, two relay timers, periodic clock.
- Override during power failure for up to 20 s with power failure recognition.
- Four level acknowledgement and notification system.
- Function reporting: execution of commands are clearly confirmed.
- Automatic creation of status reporting for visualisation and more.

LCN-SHS | LCN-ESS

Universal sensor module for DIN rail mounting | Sensor module for screw mounting

- **Four simulated simulated outputs**
- **Controls 160 target addresses with max. 480 functions**
- **With T-, I- and P-Port connections**
- **Code lock applicable from firmware 1E040F)**

Technical Data

Connection:

Power supply:	230 VAC ±15%, 50/60Hz optional 110 V
Input power	< 0.4 W power consumption
Terminals:	Screwless, max. 16 A
Wire type:	Solid or strand wire max. 2.5 mm² or with insulated ferrules 1.5 mm²
Connection sensor side:	T-, I- and P-Port
Electronic outputs:	none, four simulated outputs

General details:

Operating temperature:	-10 to 40 °C
Humidity:	Max. 80% rel., no condensing
Environmental conditions:	Stationary installation according to VDE 632,VDE 637
Degree of protection:	IP 20

Dimensions:

LCN-SHS (W x H x D)	37 x 92 x 66,5 mm 61,5 mm via DIN rail
Space requirement:	2 DU
Installation:	on 35 mm mounting rail (DIN 50022)

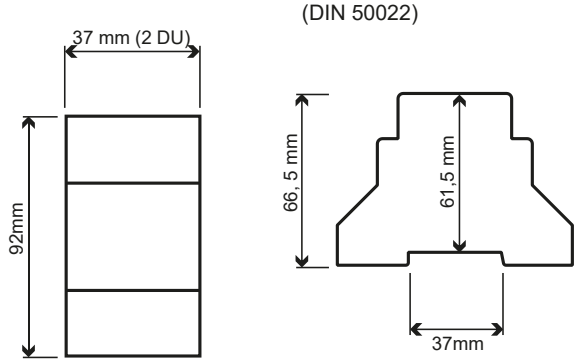

LCN-ESS (W x H x D):	35 x 102 x 23 mm
Installation:	Screw mounting

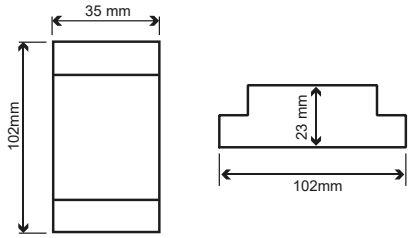

Circuit diagram:

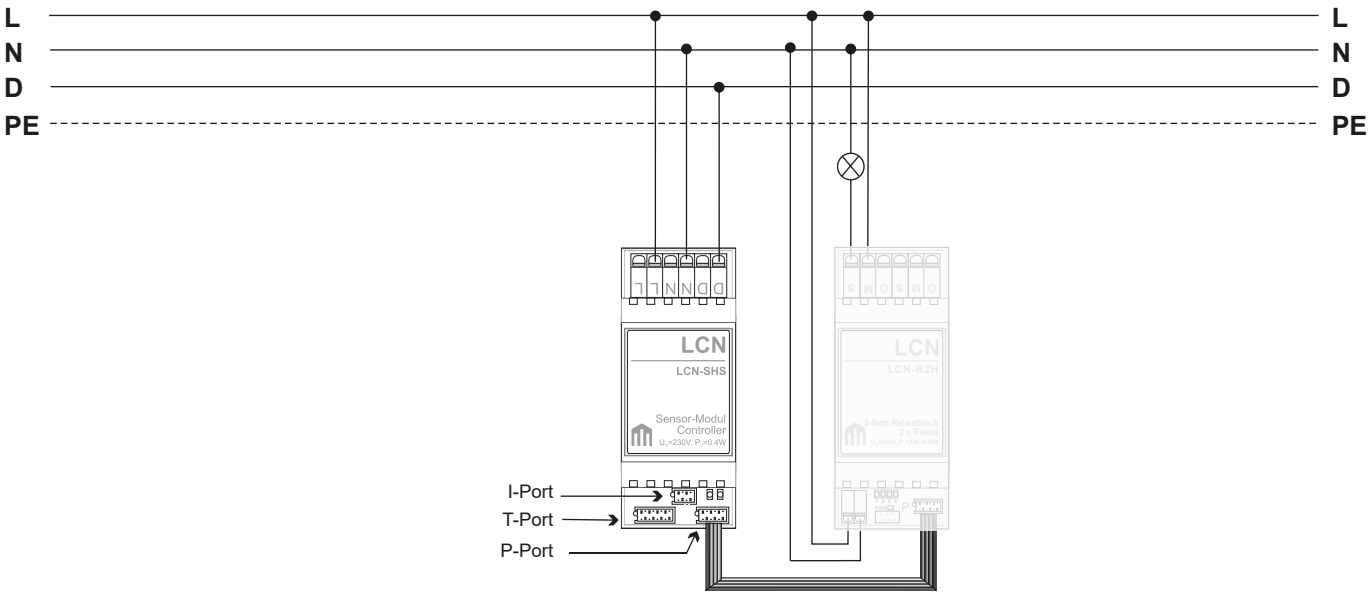

LCN-SHU

Universal sensor/actuator module with trailing or leading phase-cut for DIN rail mounting

The LCN-SHU standard DIN rail module is a sensor/actuator module of the LCN bus system. It has two switchable or dimmable electronic outputs 230 Volt. The two electronic outputs can be operated independently as trailing or leading phase-cut or as zero voltage switches. They each have independent dimming ramps and timers. Two further outputs are available, but not connected to 230 Volt terminals. These outputs can be used for DALI or LEDs with LCN-HL4+.Furthermore, the LCN-SHU has T-, I- and P-Ports for accommodating LCN sensors and actuators. The internal operating program can be freely parametrized using the LCN system software LCN-PRO.

Application fields

- High-quality lighting controls up to 2 x 300 VA at theatre level, complex lighting effects can be implemented, daylight-dependent lighting control
- Control of shades, for up to four motor pairs with LCN-R4M2H
- Individual room control: cooling, heating, ventilation
- Access control with IR remote control and transponder
- Automatic controls with many timers and links
- Hierarchical links of authorizations
- Alarm systems, even with several zones and complex conditions, shunt lock, pre-alarm, etc.
- Links across trade boundaries:
  Lighting « Shading « Alarm « Access, ...

This provdes high functionality with cost-effective multiple use of sensors and actuators

Note: All functions can be used independently and are therefore available simultaneously.

Hardware

- 230 Volt power supply unit 50/60 Hz, optional 110 V
- Two electronic switching outputs 230 Volt, maximum 300 VA: zero voltage switching or dimmable phase cut-off and cut-off
- T-Port for connecting up to eight keys via key converter LCN-T8, LCN-TEx or for connecting LCN-GT(S)12, LCN-GT(S)6 and others
- I-Port for the operation of LCN-RR IR remote control receiver, LCN-TS temperature sensor, LCN-PMI motion detector, LCN-GUS interior sensors, LCN-ULT transponder reader, LCN-GT(S)xD glass info module, LCN-BT4H/R binary push-button sensor and others
- P-Port as digital input/output for extensions such as relays LCN-R4M2H or LCN-R2H, LCN-BS4 current sensors and others.

Functional description

Four outputs, two of them are connected to the outside: Switching and dimming, brightness and ramp individually adjustable. Two timers from 10 milliseconds to 40 minutes allow short-time timers, staircase lighting and more. Each of the four outputs offers 100 light scene memories, each of which saves brightness and ramp.

The LCN-SHU supports four DALI groups via LCN-DIH. In addition, all DALI devices can be controlled directly via the LCN-DIH. Connection for eight conventional keys with LCN-T8 adapter cable A total of 32 keys in four tables result in 192 commands to 64 targets. The keys support three functions: Short, Hold and Release. Tabletop functions for twelve virtual LEDs with four states: On, Off, Flashing, Flickering. Four logical links for hierarchical error message processing according to DIN.

Decoding of the IR remote control receiver. Evaluation directly or via the LCN-GVS. Functions for key levels, encrypted transmission, transmitter differentiation, can be combined with transponder, person recognition.

Further functions:

- Measured value processing with twelve variables for up to twelve values with calculator, adjustable mean value calculation etc. Two freely parameterisable continuous controllers. Measured values and manipulated variables can be distributed in the bus as required.
- Additional analog value processing via 16 switching thresholds in four TH35 registers = 32 commands
- Transponder data processing for up to 16 transponders, unlimited number when operating the LCN-GVS visualisation.
- Code lock functions with LCN-GT6, -GT8 and GT12
- Control with dependencies and shortcuts, locking and releasing individual keys/hierarchical authorizations.
- Four timers 1 s to 45 days, two timer relays, periodic timer.
- Bridging of power failures up to 20 s with power failure detection.
- Function acknowledgement: the execution is clearly confirmed.
- Automatic generation of real status messages for visualisation.

LCN-SHU

Universal sensor/actuator module with trailing or leading phase-cut for DIN rail mounting

- **Comprehensive dim and ramp functions**
- **Leading and trailing phase-cut**
- **100 savable light scenes per DALI group**
- **With T-, I- and P-Port connections**
- **Code lock applicable from firmware 1E031E**
- **Tunable White usable from firmware 1E031E**

Technical Data

Connection:

Power supply:	230 VAC ±15%, 50/60 Hz optional 110 V
Power consumption:	0.5 W
Terminals /conductor type:: (load side)	Screwless, max. 16 A 2.5 mm² or wire with ferrule max.1.5 mm² loop-through current max. 16 A
Sensor side connection:	T-, I- and P-Port

Outputs

Type:	2 x Zero voltage switching or phase cut-off dimmer, two simulated outputs
Resolution:	200 steps in dimming mode Response point of LEDs and characteristic adjustable
Load:	each 300 VA cosφ = 1
Overload resistance:	1 kW each max. 10 s
Power loss:	1% of the apparent power

Installation

Operating temperature:	-10 to 40 °C
Humidity:	max. 80% rel., non condensing
Ambient conditions:	Use in stationary Installation according to VDE632, VDE637
Degree of protection:	IP20

Dimensions:

LCN-SHU (W x H x D)	37 x 92 x 66,5 mm 61,5 mm via DIN rail
Space requirement:	2 DU
Installation:	on 35 mm mounting rail (DIN 50022)

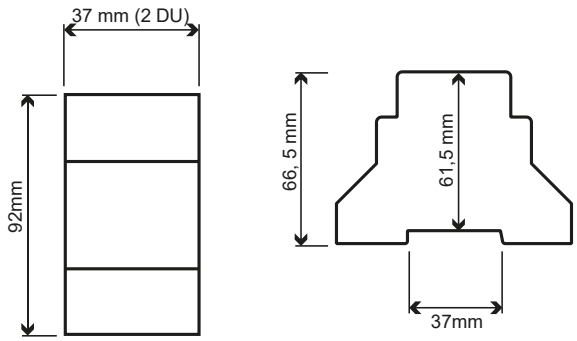

Circuit diagram:

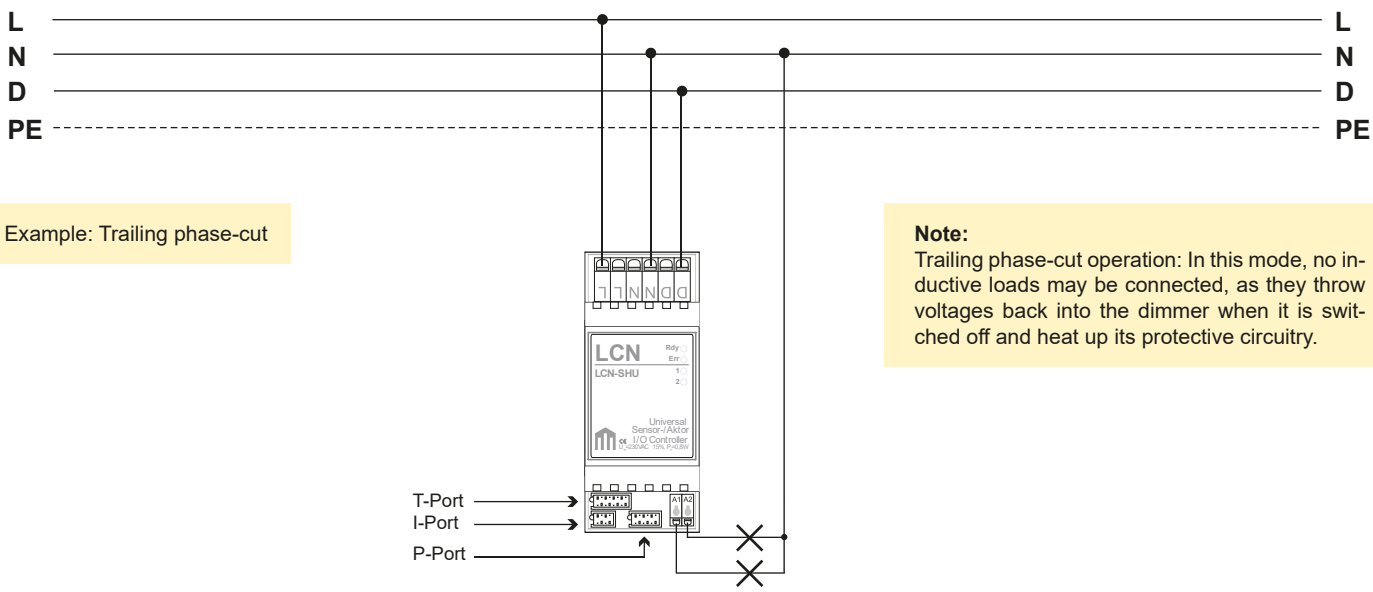

Example: Trailing phase-cut

Note:
Trailing phase-cut operation: In this mode, no inductive loads may be connected, as they throw voltages back into the dimmer when it is switched off and heat up its protective circuitry.

LCN-SHD | LCN-ESD

DALI room controller/sensor module for DIN rail mounting | for screw mounting

The LCN-SHD/-ESD controls up to 40 DALI ballasts in four DALI groups, additional ballasts with individual commands. This makes it ideal for DALI control of a single room without having to install DALI in the maximum configuration and without voltage carry-overs. Furthermore, the LCN-SHD/-ESD has T-, I- and P-Ports for connecting LCN sensors and actuators. The internal operating program can be freely parametrized using the LCN system software LCN-PRO.

Application fields

The LCN-SHD/-ESD can parametrise DALI devices by connecting them individually to the control unit. In the simplest case with only one DALI light circuit, the LCN-SHD even controls all luminaires in the basic configuration without parametrization.

DALI-functions

- Up to 40 DALI ECGs and four DALI groups
- Extensive dimming and ramp functions
- 100 storable light scenes per DALI output, i.e. more than the usual 16 DALI scenes
- Detailed status messages for all four DALI groups

Control mode 0-10 Volt: load current max. 40mA each output
- A maximum of 60 ECG´s on each output
- Source current: max. 0,5 mA / output
- (active operation: LCN-SHD supplies current

Control mode DALI DTO, DT6, DT8: tunable white
- A maximum of 40 control gears with LCN-NDH
- A maximum of 24 control gears in the LCN-mode (low pegel)
- A maximum of 24 control gears in the standard mode(high pegel)

Hardware

- 230 Volt power supply 50/60 Hz, 110 Volt version available
- Usable for 1 x DALI and 1 x 0-10V
- T-Port for connecting up to eight keys via key converter LCN-T8,
- LCN-TEx or for connecting LCN-GT(S)12, LCN-GT(S)6 and others
- I-Port for the operation of LCN-RR IR remote control receiver, LCN-TS temperature sensor, LCN-PMI motion detector, LCN-GRT/-GUS indoor sensors, LCN-ULT transponder reader, LCN-BT4H/R binary and button sensor etc.
- P-Port as digital input/output for extensions as relays LCN-R4M2H or LCN-R2H, LCN-B8x binary sensors, LCN-BS4 current sensors etc...

Note:
Please refer to the installation guide for detailed information.

Functional description

Four simulated outputs. Two timers per output 10 ms to 40 min. enable short time timers, staircase lighting etc.. Each of the four outputs offers 100 light scene memories, each saves brightness and blending time.Position control for motors including track limitation. Connection for eight keys, which distinguish Hit, Hold, Release: three commands at two addresses each modules or groups. A total of 80 keys = 2 * 240 commands programmable to 160 destinations, of which four tables = 192 commands can be addressed directly. LCN tableau functions with four states: On, Off, Flashing, Flickering. Four total processing with twelve inputs each for logical connections and hierarchical fault message processing according to DIN. Decoding of the IR remote control receiver. Evaluation directly or via central computer. Functions for key levels, encrypted transmission, transmitter differentiation, can be combined with transponders, person recognition.

Further functions:
- Measured value processing with twelve variables for up to twelve values with calculator, adjustable mean value calculation etc. Two freely parameterisable continuous controllers. Measured values and manipulated variables can be distributed in the bus as required.
- Additional analog value processing via 16 switching thresholds in four TH35 registers = 32 commands.
- Transponder data processing for up to 16 transponders, unlimited number when operating the LCN-GVS visualisation.
- Code lock functions with LCN-GT6, -GT8 and GT12
- Control with dependencies and shortcuts, locking and releasing individual keys/hierarchical authorizations.
- Four timers 1 s to 45 days, two timers relays, periodic timer.
- Bridging of power failures up to 20 s with power failure detection.

LCN-SHD | LCN-ESD

DALI room controller/sensor module for DIN rail mounting | for screw mounting

- **Combined sensor-/actuator module with two dimming outputs 230 Volts, 300 VA**
- **Two further simulated outputs**
- **Dimmable as leading edge or as switch**
- **Controls 160 target addresses with max. 480 functions**
- **With T-, I- and P-Port connections**
- **Code lock and Tunable White usable from firmware 1E031E**

Technical Data

Connection:

Power supply:	230 VAC ±15%, 50/60 Hz optional 110 VAC or 24 VDC
Power consumption:	< 0.6 W
Terminals/conductor type: (load side)	screwless, solid max. 2.5 mm² or wire with insulated end ferrule max 1.5 mm² loop-through current max. 16 A
Ballast interface:	Solid or strand wire max. 0.5 to 1.5 mm², on N level
Sensor side connection:	T-, I- and P-Port

Outputs

Type:	1 x DALI, 1 x 0-10 V
Oper. mode 0-10 V:	Load current: max. 40 mA/output max. 60 ECGs per output Source current: max. 0.5 mA/output. (active operation: SHD supplies current)
DALI mode (DT0, 8):	max. 40 operating devices with LCN-NDH max. 24 operating devices in LCN mode (low level) max. 9 operating devices in standard mode (high level)

Installation

Operating temperature:	-10 to 40 °C
Humidity:	Max. 80% rel., non condensing
Ambient conditions:	Use in stationary installation according to VDE632, VDE637
Degree of protection:	IP20

Dimensions:

LCN-SHD (W x H x D)	37 x 92 x 66,5 mm 61,5 mm via DIN rail
Space requirement:	2 DU
Installation:	on 35 mm mounting rail (DIN 50022)

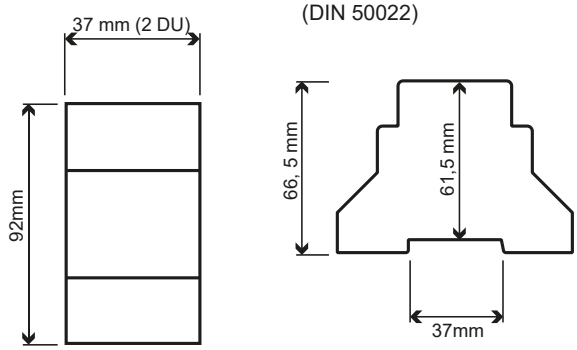

LCN-ESS (W x H x D):	35 x 102 x 23 mm
Installation:	Screw mounting

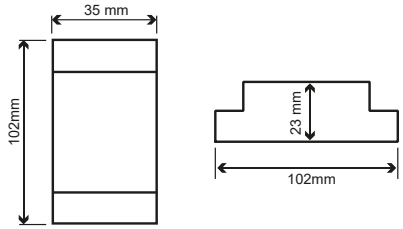

Circuit diagram:

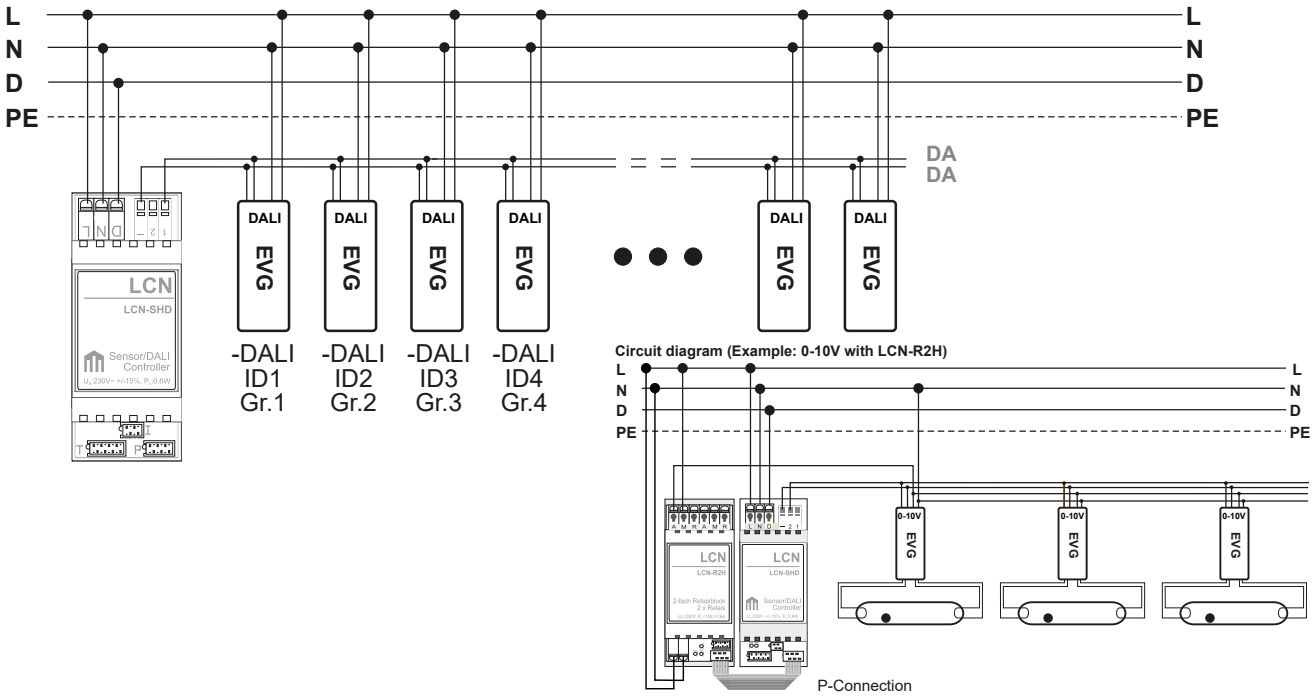

LCN-HU

Universal switching and dimming module for DIN rail mounting

The LCN-HU Universal DIN rail-mounted module is a sensor/actuator module for the LCN bus system. It has four 0-10 Volt outputs for control of electronic ballasts which can also be connected for DALI applications. Additionally, two of the four outputs run parallel on electronic switching/dimmable outputs at 230 Volt respectively. Furthermore, additional sensors and actuators can be connected to the LCN-HU's T-, I- and P-Ports. The internal operating program can be freely parametrised using the LCN system software LCN-PRO.

Application fields

- Theatre standard high grade lighting control, sophisticated lighting effects and daylight dependent lighting control.
- Simple RGBW control with electronic ballasts.
- Control of solar shading and conservatories.
- Individual room control: cooling, heating and ventilation.
- Access control with IR remote control and transponders.
- Automatic control with numerous timers and associated logical operations.
- Hierarchical logical operations/authorisation.
- Alarm systems with multiple zones and complex requirements
- Associated logical operations across installation/facility boundaries including: lighting‹-› solar shading ‹-› alarm ‹-› entry restriction, etc.
- High performance through cost effective multiple application of sensors and actuators.

All functions can used independently and are also available to be used simultaneously.

Hardware

- 230 Volt power supply, 50/60 Hz, 110 Volt version available.
- Two 230 Volt/500 VA zero voltage electronic switching or dimming outputs, leading phase cut.
- Four analogue 0-10 Volt outputs, switchable to DALI
- T-Port for connecting up to eight keys via key converter LCN-T8, LCN-TEx or for connecting LCN-GT(S)12, LCN-GT(S)6 and others.
- I-Port for combined connection of LCN-RR IR-remote-control receiver, LCN-TS temperature sensor, LCN-PMI motion detector, LCN-GT(S)xD glass touch keypad etc.
- P-Port connection as digital in-/output for further peripheries such as relays LCN-R4M2H or LCN-R2H, LCN-BS4 current sensor etc.

Note:
For control/activation of external relays via the electronic outputs, the internal suppression of radio interference can be switched off using the base load module LCN-C2GH. Care must be taken with holding currents to the conventional relays'. For detailed instructions please refer to the installation guide. The operation of LCN-R1U and LCN-DDR is not possible.

Operating programs

Four outputs, two of them are electronic outputs for switching, dimming, brightness and blending control which can all be set individually. Two timing circuits 10 ms to 40 min allow momentary timers, staircase lighting, etc. All four outputs are capable of saving up to 100 light scenes, each saving brightness and blending time. Four analogue channels 0-10 Volt, alternatively four DALI groups. Position control for motors including drive limiting. Connection for eight keys with key converter which can distinguish between the Short, Hold and Release functions: each of the three commands can be sent to two addresses, modules or groups. In total 32 keys in 4 tables = 192 commands to 64 target addresses.

LCN tableau/control panel functions with four states: On, Off, Flashing and Flickering. Four summing operations each with twelve inputs for logical operations and hierarchal fault signal processing in compliance with DIN. Decoding of the IR receiver. Immediate evaluation or via main computer. Functions for key levels, encrypted transmission, transmission differentiation, transponder combinable, person identification.

Further functions:

- Two freely parametable continuous action controllers. Results and any variables can be distributed on the bus.
- Analogue value data processing over four thresholds with hysteresis, can also be used for controlling, counting/calculating.
- Transponder data processing for up to 16 transponders, unlimited number when using visualisation software.
- Control with independent and associated logical operations/proces
- Code lock functions with LCN-GT6, -GT8 and GT12 ses, single key locking and unlocking, hierarchical authorisation.
- Four timers 1 s to 45 days, two relay timers, periodic clock.
- Override during power failure for up to 20 seconds with power failure recognition.
- Four level acknowledgement and notification system.
- Automatic creation of status reporting for visualisation and much more.

LCN-HU

Universal switching and dimming module for DIN rail mounting

- **Combined sensor-/actuator module with 2 switching/ dimming outputs 230 Volts, 500 VA**
- **Two further simulated outputs**
- **Additional electronic outputs: 4 x 0-10 Volts or DALI**
- **Dimmable in leading edge or as switch**
- **With T-, I- and P-Port connections**
- **Code lock and Tunable White usable from firmware 1E031E**

Dimensions:

LCN-HU (W x H x D)	85 x 92 x 66,5 mm 61,5 mm via DIN rail
Space requirement:	5 DU
Installation:	on 35 mm mounting rail (DIN 50022)

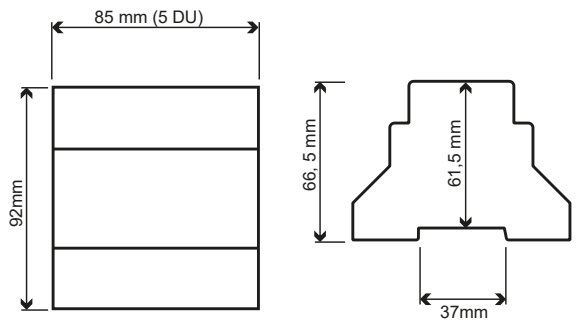

Technical Data

Connection:

Power supply:	230 VAC ±15%, 50/60 Hz optional 110 V or 24 VDC
Input power:	0.5 W power consumption
Terminals:	Screwless, max. 16 A
Wire type:	Solid or strand wire max. 2.5 mm², or with insulated ferrules max.1.5 mm²
Ballast interface:	Solid or strand wire max. 0.5 to 1.5 mm², on N level
Sensor side connection:	T-, I- and P-Port

Electronic outputs:

Load output:	Zero-voltage switch or leading phase cut dimmer
Resolution:	200 dimming levels
Switching capacity:	500 VA, cosφ = 1
Overload rating:	1 kW max.10 s
Power dissipation:	1% of the apparent power 10 W heat dissipation at full load
Fuse per output:	2.5 AF

Control outputs:

Conductor type:	max. 0.8 mm Ø
0-10 V output:	
Source current	max. 0.5 mA
Load current:	max. 40 mA
DALI mode:	Max. 16 electronic ballasts

General details:

Operating temperature:	-10 to 40 °C
Humidity:	max. 80% rel., non condensing
Environmental conditions:	stationary installation according to VDE 632,VDE 637,
Degree of protection:	IP20

Circuit diagram:

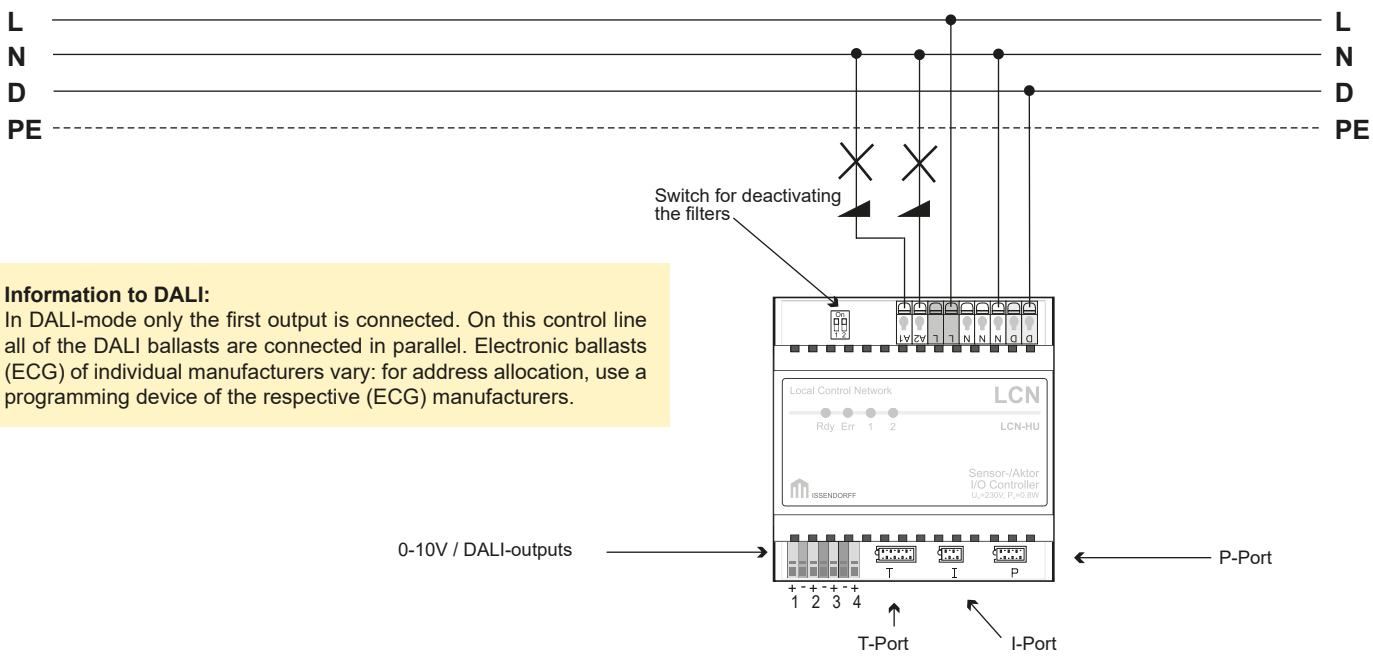

Information to DALI:
In DALI-mode only the first output is connected. On this control line all of the DALI ballasts are connected in parallel. Electronic ballasts (ECG) of individual manufacturers vary: for address allocation, use a programming device of the respective (ECG) manufacturers.

LCN-SR6 | LCN-SR6G

Relay module with six outputs for DIN rail mounting

The LCN-SR6 is a six-way relay module of the LCN bus system that does not require a separate LCN bus module. Any load can be switched with its relays. The LCN-SR6 can be extended to eight relays with one LCN-R2H if required.

Application fields

The six relays are switched individually by command on the LCN bus. They can also be used to control roller shutter drives, for this application the LCN-SR6 can be switched to roller shutter mode with the LCN-PRO. The relays support all common LCN functions, such as on/off/invert, timer, status commands, etc. For test purposes, it is possible to manually switch the relays independently of the LCN bus by using a button on the top of the module.

The IR receiver LCN-RR, the binary sensor LCN-B3I, the LCN-GUS, the LCN-PMI and the temperature sensor LCN-TS can be connected to the I-Port. In addition, keypads of the LCN-GT(S) series can be connected via the I-Port, e. g. LCN-GT(S)4D, LCN-GT(S)10D or LCN-GT2. These modules can also be used parallel with an the LCN-IV. The I-Port can be used as a counter for pulses up to one Kilohertz if no other peripherals are connected, the maximum counter value is 30,000.

Hardware

- Six load relays with potential-free changeover contacts, normally closed and normally open at 230 VAC/16 A, AC1
- Maximum inrush current 70 A, adjacent contacts max. 12 A, sum of all six relays max. 100 A
- Pluggable relays
- I-Port for combined connection of LCN-RR IR-remote-control receiver, LCN-TS temperature sensor, LCN-PMI motion detector, LCN-ULT transponder reader, LCN-GTxD glass touch keypad etc.
- P-Port connection as digital in-/output for further peripheries such as relays LCN-R4M2H or LCN-R2H, LCN-BS4 current sensor etc

Note:
The relay contacts of the LCN-SR6 are optimized for high inrush currents by AgSnO2. They require a minimum load of 20 volts and 100 milliamperes to avoid oxide layers and contact faults. When planning the contact loads, consider inrush and reactive currents! Relays with gold contacts are optionally available for use in media technology.

LCN-SR6G
If in individual cases low voltages are to be switched, the LCN-SR6 is available as LCN-SR6G. The relays then have gold contacts which are suitable for voltages below 20 V and currents below 100mA.

Functional description

The six relays are switched individually by command on the LCN bus. They can also be used to control roller shutter drives, for which purpose the LCN-SR6 can be switched to roller shutter mode with the LCN-PRO. The relays support all common LCN functions, such as on/off/invert, timer, status commands, etc. For test purposes it is possible to manually switch the relays independently of the LCN bus with a button on the front of the module. Connection of conventional push-buttons which distinguish short, long, relaese: 3 commands each at 2 addresses (modules or groups). A total of 32 keys in four tables result in 192 commands to 64 destinations.

LCN tableau functions with four states: On, Off, Flashing, Flickering. Four sum processes with 12 inputs each, hierarchical fault message processing according to DIN. IR remote control reception: Evaluation directly or via the LCN-GVS. Key levels, codes, transmitter differentiation, can be combined with transponder, person recognition.

Further functions:
- Two freely parametable continuous action controllers. Results and any variables can be distributed on the bus.
- Analogue value data processing over four thresholds with hysteresis, can also be used for controlling, counting/calculating.
- Transponder data processing for up to 16 transponders, unlimited number when using visualisation software.
- Control with independent and associated logical operations/processes, single key locking and unlocking, hierarchical authorisation.
- Four timers 1 s to 45 days, two relay timers, periodic clock.
- Override during power failure for up to 20 seconds with power failure recognition.
- Four level acknowledgement and notification system.
- Automatic creation of status reporting for visualisation and much more.

LCN-SR6 | LCN-SR6G

Relay module with six outputs for the DIN rail

- **Independant module, needs no further LCN bus module**
- **Six power relays with potential free switch-over contacts for 250 Volts/16 A, AC1**
- **3600 VA switching capacity on each relay**
- **With I- and P-Port connecting terminal**

Technical Data

Connection

Power supply:	85 to 265 VAC, 50/60 Hz
Input power:	max. 2 W
Terminals bus side:	solid max. 2.5 mm², stranded wire with wire end ferrule max 1.5 mm²,loop-through current max. 16 A
Terminals load side:	solid or stranded, max. 2.5 mm², loop through current max. 16 A
Sensor side connection:	I- and P-Port

Relays:

Nominal current:	16 A/AC1 (resistive load)
Max. starting current:	70 A, adjacent contacts max. 12 A, sum of all six Relay: max.100 A
Contact current:	100 mA bis 16 A, AC1
Contact voltage:	> 20 V
Contact material:	AgSnO2

General details:

Operating temperature:	-10 to 40 °C
Humidity:	Max. 80% rel., non condensing
Environmental conditions:	Stationary installation according to VDE 632,VDE 637
Degree of protection:	IP 20

Dimensions

LCN-SR6 (W x H x D):	85 x 92 x 66,5 mm 61,5 mm via DIN rail
Space requirement:	5 DU
Installation:	on 35 mm mounting rail (DIN 50022)

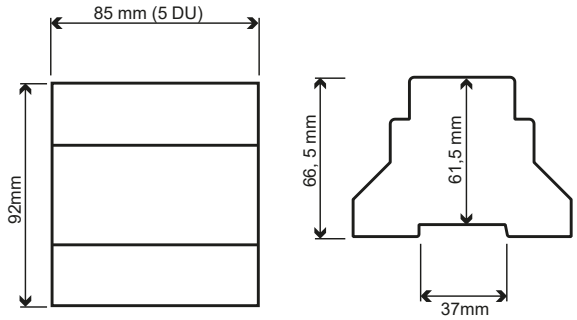

Circuit diagram

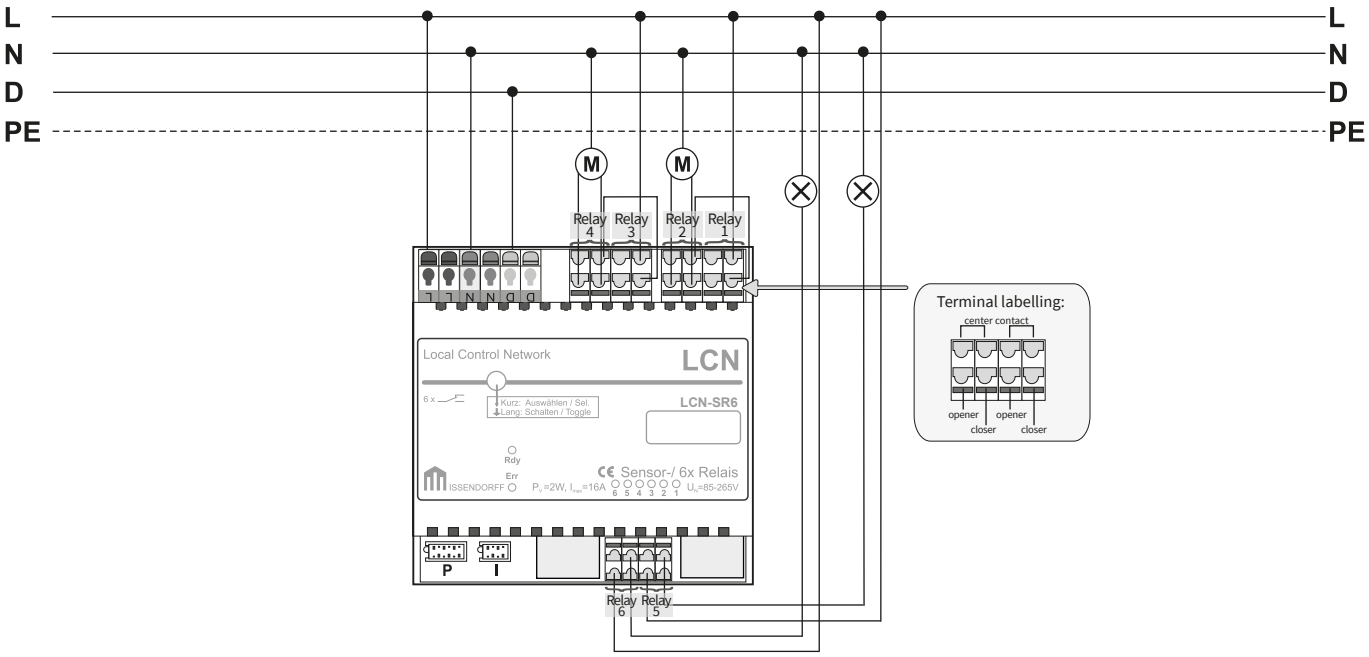

LCN | Couplers

LCN-PKU

Coupler module for connection to PC for DIN rail mounting

The LCN-PKU PC coupler is a passive coupling module for the LCN bus system. It comes with a USB socket for connection to a PC and connects to the LCN bus. As the module has no processor, setting of parameters through the system software is not necessary.

Application fields

The LCN-PKU serves as the access point to LCN modules via a laptop or a PC. Through this connection the system technician can set the parameters of the individual modules. A further application is the connection of the LCN visualisation system to the PC. Using the system software LCN-GVS allows the direct and bi-directional transfer of data between the LCN systems operational statuses, while allowing modifications and control commands from the visualisation PC to proceed.

Furthermore, the PC coupler serves as a gateway for connection to other systems. This allows for system specific devices such as smoke detectors and/or management software such as software for connection to AMX/DMX, ASCII, MOD-BUS, OPC and others to be coupled onto the LCN system.

Hardware

- USB connection
- Connection to LCN bus
- Visual display of operating status

Note:
The parallel operation of several LCN-PKU couplers in the same LCN-bus is possible. The PC interface must not be used by drivers of other devices such as mouse, PDA .

The LCN-PRO automatically detects the LCN-PKU and proceeds with the installation of the driver.

LCN-PKU

Coupler module for connection to PC for DIN rail mounting

- **Passive coupler module from the LCN bus system**
- **Connectable directly to the USB-interface**
- **Five diagnostic LED´s show the status**

Technical Data

Connection:

Power supply:	230 VAC ±15%, 50 Hz (110 VAC ±15% type available)
Input Power:	0.6 W power consumption
Terminals:	Screwless, max. 16 A
Conductor type:	Solid or multi core max.2.5 mm² with insulated ferrules max.1,5 mm²

PC:

Port:	USB

General details:

Operating temp:	-10 to 40 °C
Humidity:	max. 80% rel., Non condensing
Envioromental conditions:	Stationary installation according to VDE 631, VDE637
Degree of protection:	IP 20

The LCN-PKU galvanically separates/isolates the LCN bus from the USB port at up to 4 KV.

Dimensions:

LCN-PKU (W x H x D):	37 x 92 x 66,5 mm 61,5 mm via DIN rail
Space requirement:	2 DU
Installation:	on 35 mm mounting rail (DIN 50022)

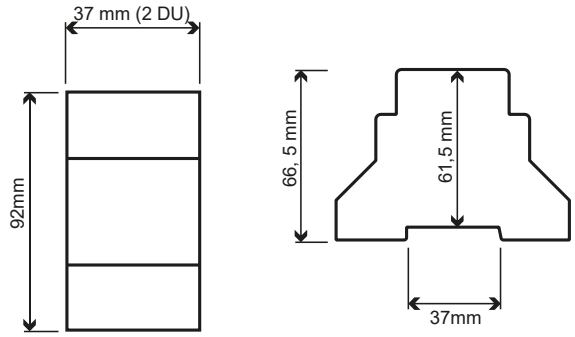

Circuit diagram

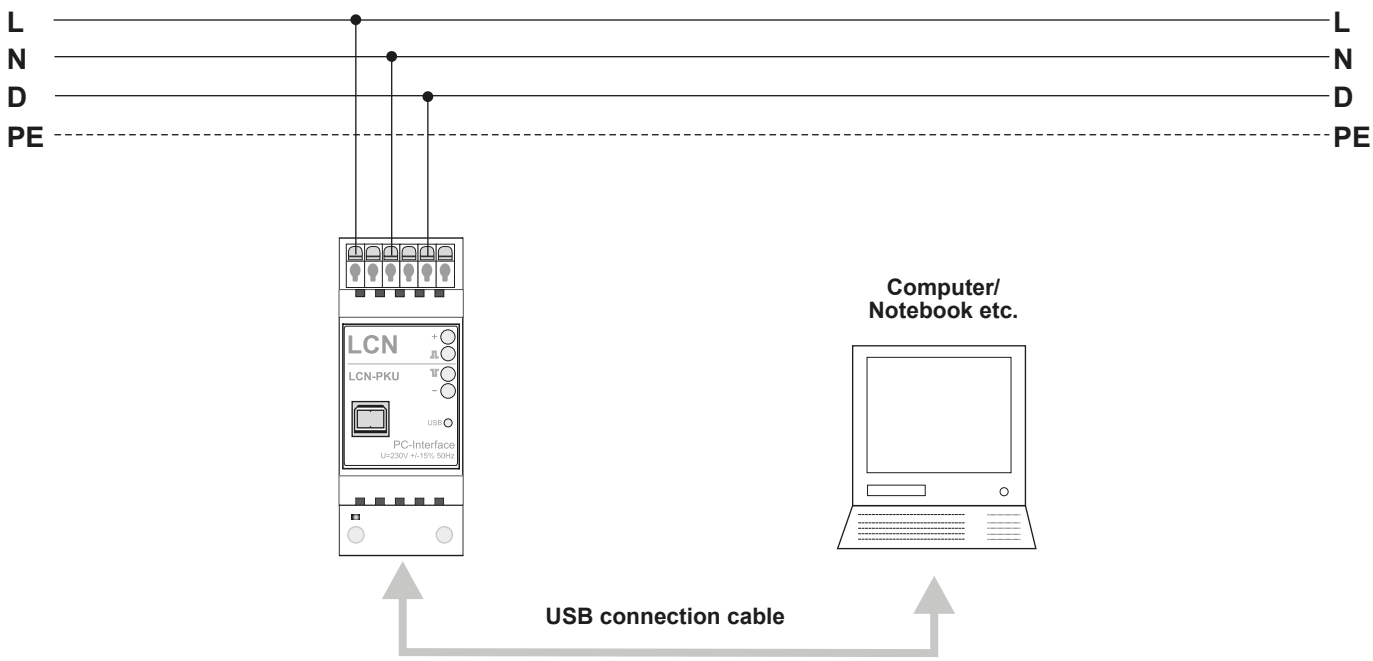

LCN-VISU

Network coupler with integrated mini-visualization

LCN-VISU (formerly LCN-PKEV) serves as a network access to the LCN system and is the successor of the LCN-PKE. Via this access, the parameterization of the LCN system is carried out by the installer. This access can also be used to link to other systems.

Application fields

The LCN-PCHK software runs on the network coupler, through which two programs, e.g. the LCN-PRO and the LCN-GVS, can access the LCN bus simultaneously. If necessary, the number of connections can be extended by means of separate licenses.

Thanks to the support of openHAB, a wide range of third-party smart home devices can be connected to the LCN system. This means that voice assistants, smart lighting systems and audio and entertainment electronics, such as those offered by Amazon, Sonos or Philips, can be connected and controlled with LCN.

The openHAB support also enables the mini-visualization to conveniently operate smart buildings via smartphone, tablet, PC, etc. With the compact and slim mini-visualization, an LCN segment can be displayed and controlled even more easily and quickly.

Fields of application:

- Remote maintenance (LCN-PRO)
- Visualization (LCN-GVS/LCN-VISU)
- Linking (with PCK protocol)

Functional description

The LCN-VISU supports another extreme bus connection in addition to visualization. Additional connections are possible. This requires an LCN-PCHK license full version for the second external connection. Each additional connection requires an upgrade license. Separate instructions for setting up the visualization are available at www.lcn.eu.

Coupling LCN-PCK
The LCN-VISU also supports the PCK protocol, via which external systems can directly control the LCN bus and receive status messages. This type of communication is quick and easy to implement in third-party applications.

Time/date
When an Internet connection is established, the LCN-VISU regularly resets the time on the LCN bus. The current time can be displayed by LCN-GT4D/-GT10D and used for time switch functions.

WLAN
The coupler has a WLAN access point. After ten minutes of inactivity, the WLAN function deactivates. It can be reactivated by pressing the button or via the web interface.

Note:
The login data is used for the interface and access to the LCN bus and should therefore be changed.

LCN-VISU

Network coupler with integrated mini-visualization

- **Coupling to the LCN-GVS**
- **LAN / WLAN coupling module**
- **Integrated mini visualization**
- **(Remote) maintenance of the LCN-PRO**

Technical Data

Connection:

Power supply:	85V to 265 VAC, 50/60 Hz
Input Power:	2 W
Terminals:	Screwless, max. 16 A
Conductor type:	Solid or strand wire max.2.5 mm² with insulated ferrules max.1.5 mm²

Network connection

LAN:	RJ45
WiFi:	802.11 b/g/n, WPA2 encryption

General details:

Operating temp:	-10 to 40 °C
Humidity:	max. 80% rel., non condensing
Envioromental conditions:	Stationary installation according to VDE 631, VDE637
Degree of protection:	IP 20

Install voltage-free!
The LCN-VISU galvanically isolates/isolates the LCN bus up to 4KV from the RJ45 socket.

Dimensions:

LCN-VISU (W x H x D):	37 x 92 x 66,5 mm 61,5 mm via DIN rail
Space requirement:	2 DU
Installation:	on 35 mm mounting rail (DIN 50022)

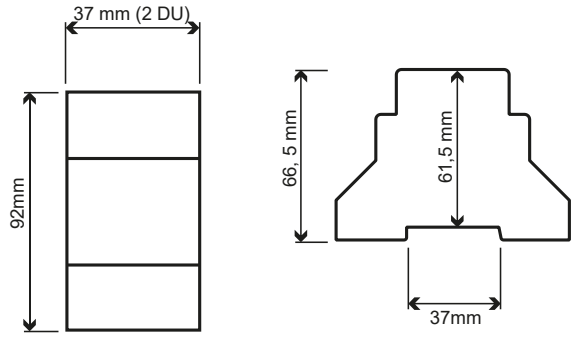

Circuit diagram

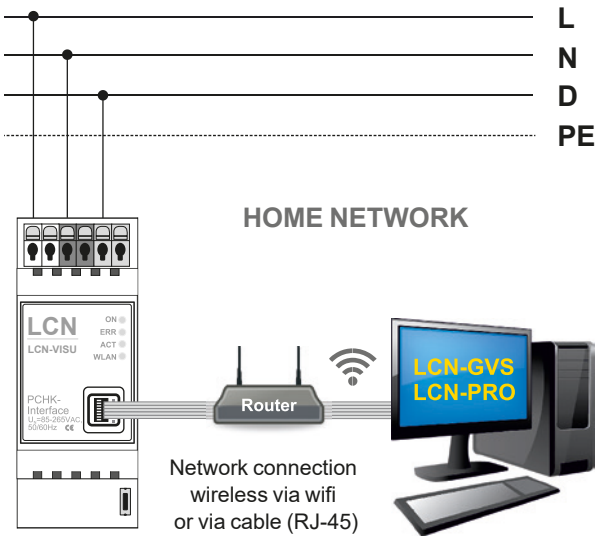

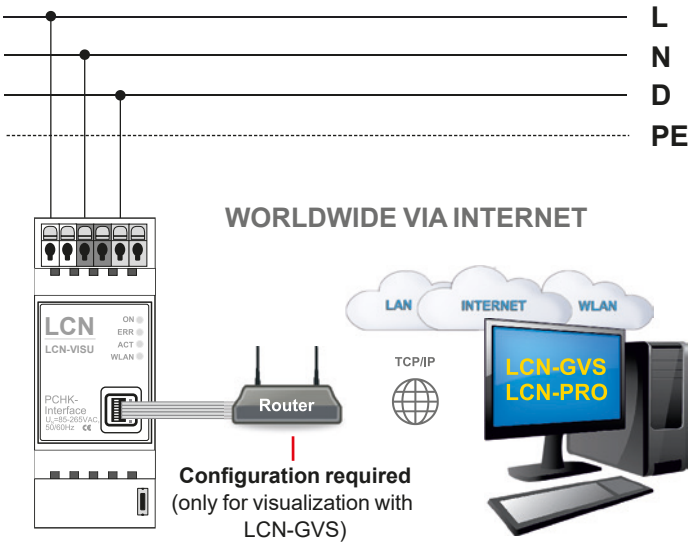

LCN-IS2

Isolation amplifier for DIN rail mounting

The LCN-IS2 isolation amplifier is an LCN coupler module for the LCN bus system. It has connections for the LCN bus and the LCN two-wire bus. As the module has no processor, setting of parameters through the system software is not necessary.

Application fields

The isolation amplifier LCN-IS2 is used for signal amplification of the LCN bus. Each LCN-IS2 allows the connection of up to a max of 1km with NYM cable. Additionally it provides galvanic separation between various installation circuits, ie. between circuits protected by RCD within an LCN segment. Plus, it is necessary for the signal conversion and preparation of the LCN fibre optic couplers LCN-LLK and LCN-LLG respectively.

Hardware

- Connections to the LCN bus.
- Connections to the LCN two-wire bus.
- LED-status display on the LCN-IS2 buffer amplifier for immediate diagnosis.

Note:
Only one two-wire bus allowed per segment.

The maximum length of the two-wire bus from the first to the last LCN-IS is 50 m. A maximum of 15 units may be connected to a two-wire bus. For detailed information please refer to the installation guide. The LCN-IS2 isolation amplifier is an LCN coupler module for the LCN bus system. It has connections for the LCN BUS and the LCN two-wire bus. As the module has no processor, setting of parameters through the system software is not necessary.

Use of isolation amplifiers

Due to voltage drags please separate distributions with different feeds to connect directly to the data wire .

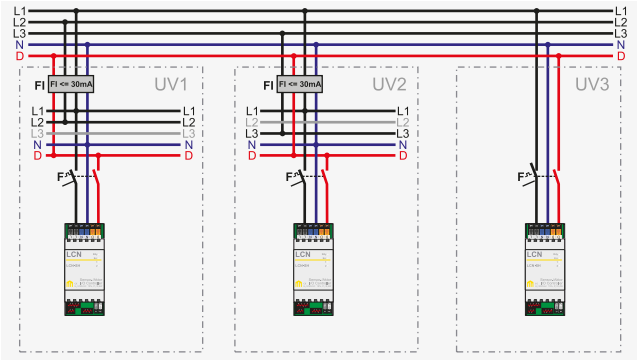

For the clean separation of distributions (all sections together), the isolation amplifier LCN -IS2 can be used up to a distance of around 50 meters.

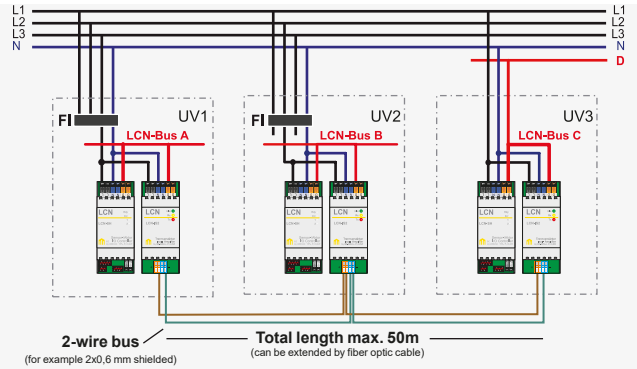

LCN-IS2

Isolation-amplifier for DIN rail mounting

- **Isolation-amplifier for boosting signals**
- **Terminals for the LCN bus**
- **Terminals for the LCN two-wire bus**
- **LED status indication for diagnosing**
- **For central installation**

Technical Data

Connection:

Power supply:	85 to 265 VAC, 50/60 Hz
Input power:	2 W power consumption
Cable type:	screwless, max. 2.5 mm² or stranded wire with end ferrule max 1.5 mm², loopable Current max. 16 A

Two-wire bus connection:

Terminals:	screwless
Cable type:	max. 0.8 mm Ø
Range:	max. 50 m (total)
Devices:	max. 15 (IS, LLK and/or LLG)

General details:

Operating temperature:	-10 to 40 °C
Humidity:	max. 80% rel., non condensing
Environmental conditions:	stationary installation according to VDE 632, VDE 637
Degree of protection:	IP 20

Dimensions:

LCN-IS2 (W x H x D):	37 x 92 x 66,5 mm 61,5 mm via DIN rail
Space requirement:	2 DU
Installation:	on 35 mm mounting rail (DIN 50022)

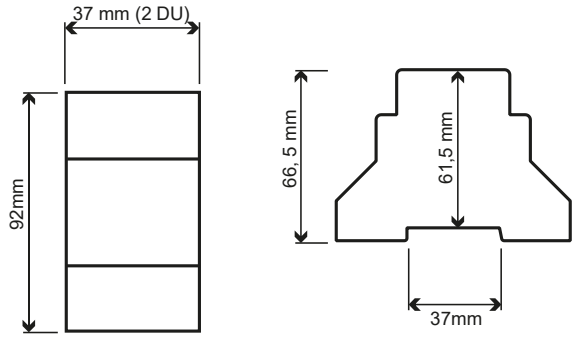

Circuit diagram

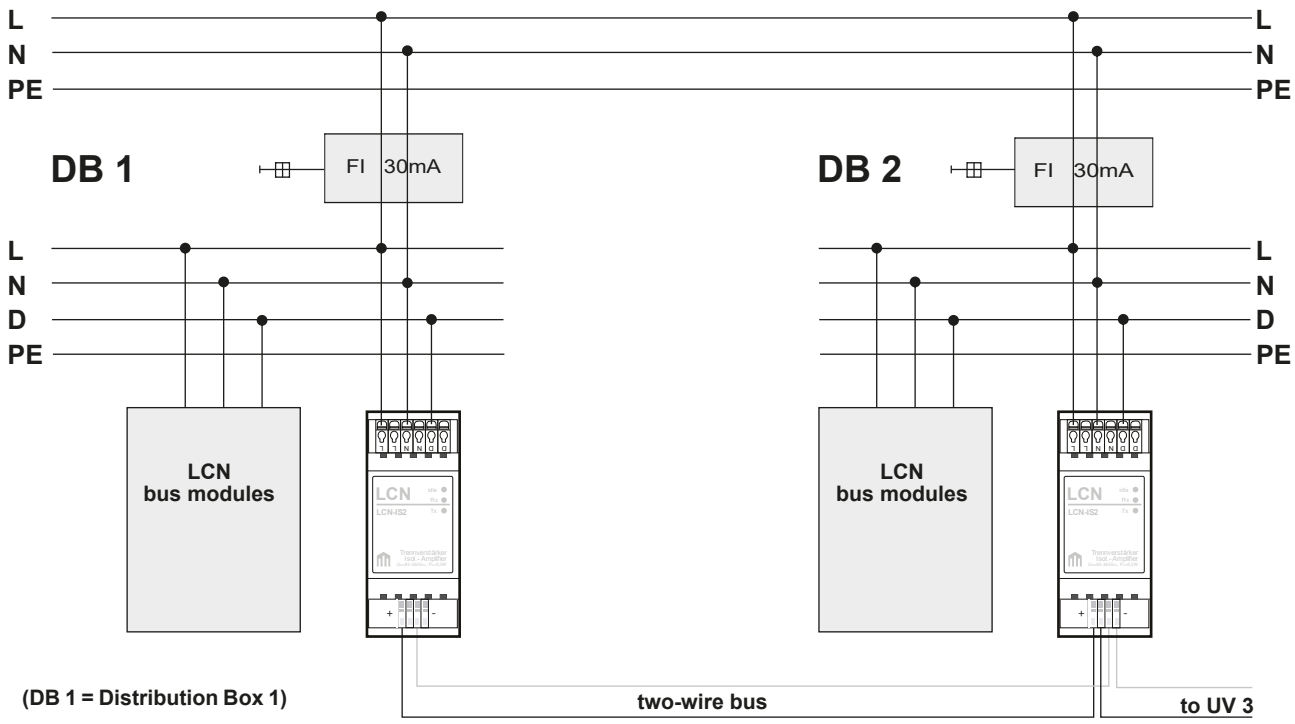

(DB 1 = Distribution Box 1)

LCN-IS2/24

24 Volt isolation amplifier for DIN rail mounting

The LCN-IS2/24 isolation amplifier is an LCN coupling module for the LCN bus system. It has connections for the 24 Volt LCN bus and the LCN two-wire bus. As the module has no processor, setting of parameters through the system software is not necessary.

Application fields

The LCN-IS2/24 isolates the data wire through opto couplers and so prevents any accidental energisation of connected devices. As a rule, the LCN-IS2/24 is used to galvanically isolate a 24 Volt LCN bus with no TN system.

Hardware

- Connections to the 24 Volt LCN bus
- Connections to the LCN two-wire bus
- LED-status display on the LCN-IS buffer amplifier for immediate diagnosis.

Note:
Only one two-wire bus allowed per segment.

The maximum length of the two-wire bus from the first to the last LCN-IS2/24 is 50 meters. A maximum of 15 units may be connected to a two-wire bus. For detailed information please refer to the installation guide.

LCN-IS2/24

24V Isolation-amplifier for DIN rail mounting

- **24 Volt isolation-amplifier for boosting signals**
- **Terminals for the LCN bus**
- **Terminals for the LCN two-wire bus**
- **LED status indication for diagnosing**
- **For central installation**

Technical Data

Connection:

Power supply:	26 V ±20%, 50 Hz
Input power:	< 1.7 W power consumption
Terminals:	screwless, max. 16 A
Cable type:	Solid or strand wire (max.2,5mm²) or with insulated ferrules (max.1,5mm²)

Two-wire bus connection:

Terminals:	screwless
Conductor type:	max. 0,8 mm Ø
Range:	max. 50 m (total)
Devices:	max. 15 (IS2/24, IS, LLK and/or LLG)

General details:

Operating temperature:	-10 to 40 °C
Humidity:	max. 80% rel., non condensing
Environmental conditions:	stationary installation according to VDE 632, VDE 637
Degree of protection:	IP 20

Dimensions:

LCN-IS2/24 (W x H x D):	37 x 92 x 66,5 mm 61,5 mm via DIN rail
Space requirement:	2 DU
Installation:	TH35 on 35 mm mounting rail (DIN 50022)

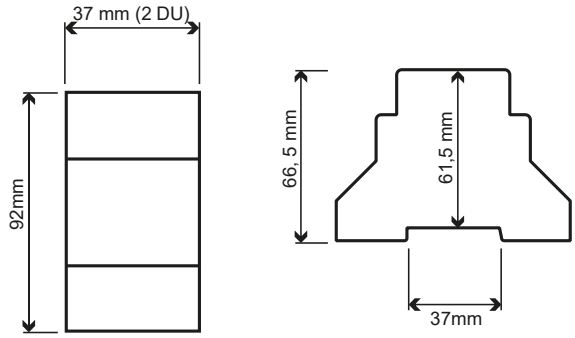

Circuit diagram

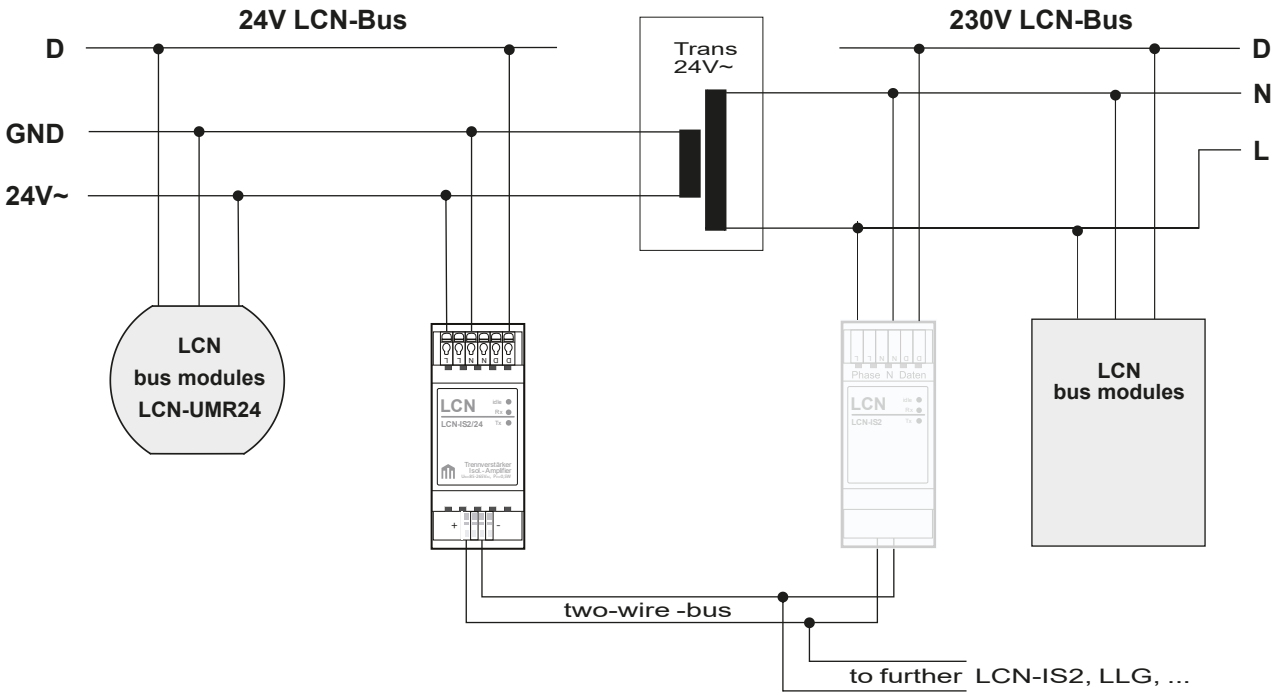

LCN-LLG

Glass fibre optics transceiver for DIN rail mounting

The LCN-LLG is the glass fibre optic LWL coupler for the LCN bus system. It is used as a double transceiver module and has connections for the LCN two-wire bus and the fibre optics cable.

As it does not have its own processor, setting of the parameters with the LCN software LCN-PRO is not necessary.

Application fields

The fibre optic LWL coupler LCN-LLG is used for the connection of spatially-separated LCN buses within an LCN segment within a range of 2km. With the LCN-LLG single building areas are connected with each other so that communication among all LCN bus modules is possible.

Hardware

- Connections for the LCN two-wire bus
- Connections for the LWL cable
- Status display for immediate diagnosis
- Test jumper for controlling the optical output level

Note:
Direct connection to the data line of the LCN bus is not possible. For this an LCN-IS2 is needed for the signal conversion. A maximum of 15 devices (LCN-IS2, LCN-LLK, LCN-LLG) can be connected to the two-wire bus. Installation regulations for laying fibre optic cables are to be adhered to. For detailed information please refer to the installation guide.

LCN-LLG

Glass fibre optics transceiver for DIN rail mounting

- **Connections for the LCN two-wire bus**
- **Connections for the fibre optic cable**
- **Status indication on the LCN-LLG for diagnosing**
- **Test jumper for controlling the level reserve**
- **Range of up to 2 Kilometres**
- **For central installation**

Dimensions:

LCN-LLG (W x H x D):	85 x 92 x 66,5 mm 61,5 mm via DIN rail
Space requirement:	5 DU
Installation:	on 35 mm mounting rail (DIN 50022)

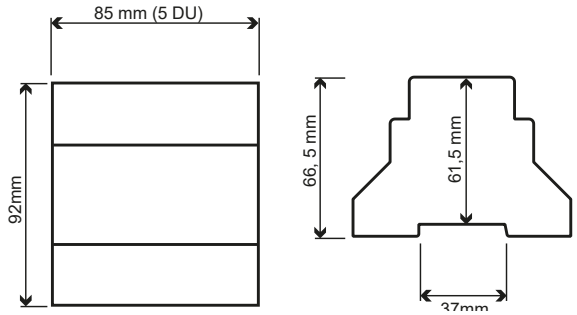

Technical Data

Connection:

Power supply:	230 VAC ±15%, 50/60 Hz optional 110 VAC
Input power:	< 2 W power consumption
Terminals:	screwless, max. 16 A
Wire type:	Solid or strand wire max.2.5 mm² or with insulated ferrules max.1.5 mm²

Fibre optics connection:

Connection:	ST bayonet
Cable type:	50/125 µm, 62.5/125 µm fibre
Wave length:	820 nm infra red light
Range:	max. 2 km
Devices:	max. 5 couplers on LWL side switchable in succession
Repeater function:	Yes

Two-wire bus connection:

Terminals:	screwless
Cable type:	max. 0.5 to 1.5 mm Ø
Range:	max. 50 m (total)
Devices:	max. 15 (IS24, IS, LLK and/or LLG)

Installation:

Operating temperature:	-10 to 40 °C
Humidity:	max. 80% rel., non condensing
Environmental conditions:	stationary installation according to VDE 632, VDE 637
Degree of protection:	IP 20

Circuit diagram

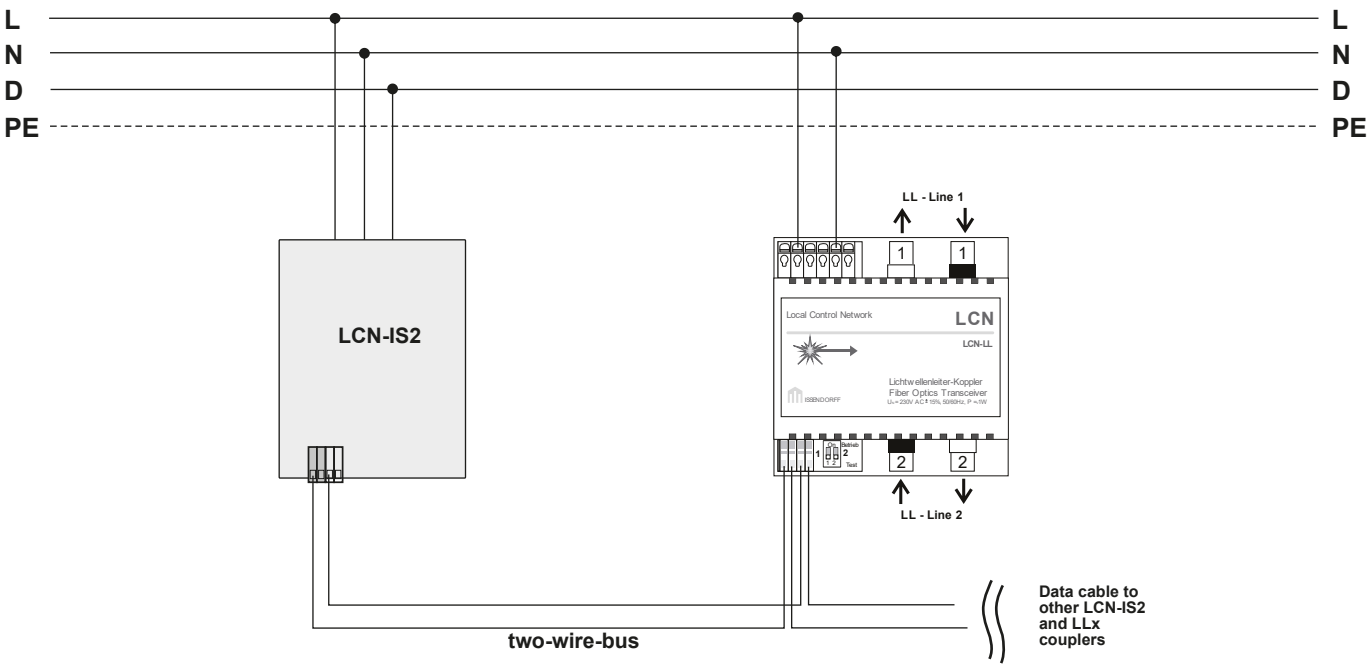

LCN-LLGS

Fiber optic coupler module for singlemode fiber optics

The LCN-LLGS module is a fiber optic coupler for building installation with LCN bus technology. The module is suitable for singlemode optical fiber with a range of up to 40 km.

Application fields

For connecting the LCN-LLGS fiber optic coupler to the LCN bus an isolation amplifier LCN-IS or LCN-IS2 is required. Up to 15 isolation amplifiers and/or LL couplers can be directly interconnected per interconnected per distribution.

Note:
Fiber optic couplers can be used as repeaters (optical repeaters). Notes on the topology can be found in the the installation manual of the LCN-IS2. Per segment there may only be one - no 2! - independent 2-wire buses!

LCN-LLGS

Fiber optic coupler module for singlemode fiber optics

- **Connections for the LCN two-wire bus**
- **Connections for the fibre optic cable**
- **Status indication on the LCN-LLGS for diagnosing**
- **DIP switch available to switch off unused LL connections**
- **Range of up to 2 Kilometres**
- **For central installation**

Technical Data

Connection:

Power supply:	85-256 VAC ±15%, 50/60 Hz
Input power:	< 2 W power consumption
Terminals:	screwless, max. 16 A
Wire type:	Solid or strand wire max.2.5 mm² or with insulated ferrules max.1.5 mm²

Fibre optics connection:

Connection:	ST bayonet
Cable type:	9/125 µm fibre
Wave length:	1310 nm, class 1 laser (DIN EN 60825-1)
Range:	max. 40 km

Two-wire bus connection:

Terminals:	screwless
Cable type:	max. 0.2 to 1.5 mm Ø (shielded) Braid 0.25 - 1.0 mm² (shielded)
Range:	max. 50 m (total)
Devices:	max. 15 (LCN-IS2, LLK and/or LLG)

Installation:

Operating temperature:	-10 to 40 °C
Humidity:	max. 80% rel., non condensing
Environmental conditions:	stationary installation according to VDE 632, VDE 637
Degree of protection:	IP 20

Dimensions:

LCN-LLGS (W x H x D):	85 x 92 x 66,5 mm 61,5 mm via DIN rail
Space requirement:	5 DU
Installation:	on 35 mm mounting rail (DIN 50022)

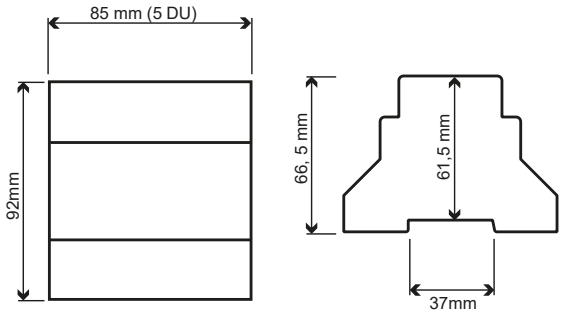

Circuit diagram

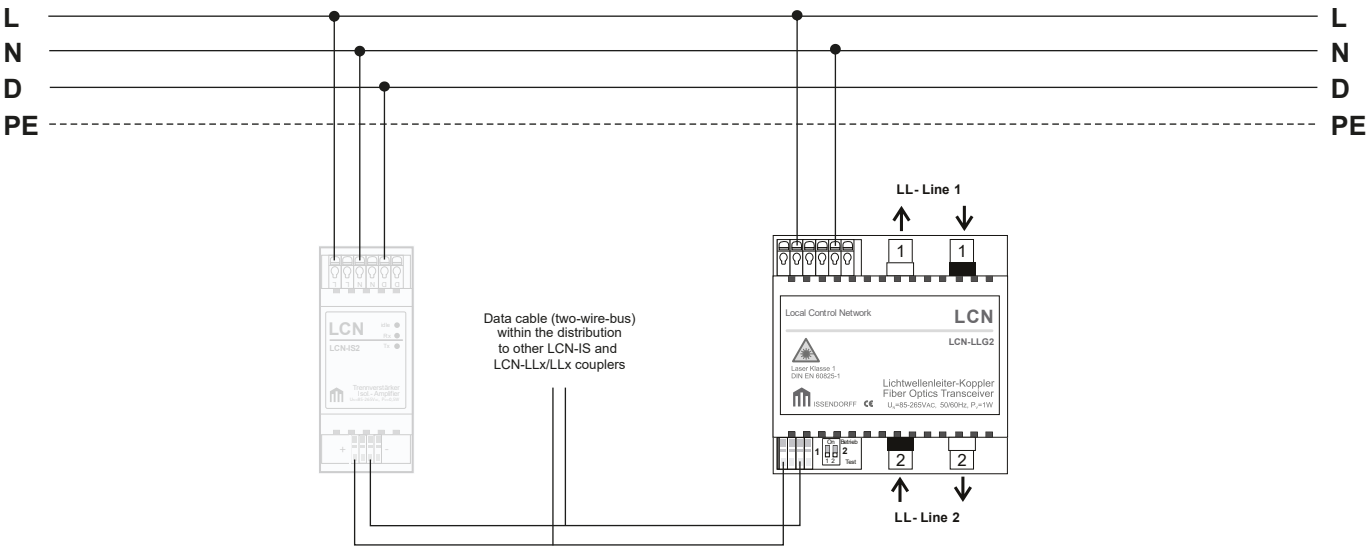

LCN-LLK

Fibre optics transceiver for plastic cable DIN rail mounting

The LCN-LLK is the plastic LWL coupler for the LCN bus system. It is used as a double transceiver module and has connections for the LCN two-wire bus and the plastic fibre optics cable. As it does not have its own processor, programming with the LCN software LCN-PRO is not necessary.

Application fields

The fibre optic LWK coupler LCN-LLK is used for the connection of spatially separated LCN buses within an LCN segment with a max. range of 100 meters when used with LCN-LK cables. Single building-, rented and supply areas are connected with each other so that communication among all LCN bus modules is possible.

Hardware

- Connections to the LCN two-wire bus
- Connections to the LWL cable
- Status display for immediate diagnosis
- Test jumper for controlling the optical output level

Fiber optic plastic cable

- Available in two types.
- Running meters
- Maximum 500 meters

Note:
Direct connection to the data line of the LCN bus is not possible. For this a LCN-IS2 is needed for the signal conversion. A maximum of 15 devices (LCN-IS2, LCN-LLK, LCN-LLG) can be connected to the two-wire bus. Installation regulations for laying fibre optic cables are to be adhered to. For detailed information please refer to the installation guide.

LCN-LLK

Fibre optics transceiver for plastic cabel DIN rail mounting

- **Connections for the LCN two-wire bus**
- **Connections for the fibre optic cable**
- **Status indication on the LCN-LLK for diagnosing**
- **Test jumper for controlling the level reserve**
- **Range maximum 100 metres**
- **For central installation**

Technical Data

Connection:

Power supply:	230 VAC ±15%, 50/60 Hz optional 110 VAC
Input power:	< 2 W power consumption
Terminals:	screwless, max. 16 A
Wire type:	Solid or strand wire max. 2.5 mm² or with insulated ferrules max.1.5 mm²

Fibre optics connection:

Connection:	union nut
Cable type:	980/1000 nm
Wave length:	650 nm (visible, red light)
Range:	max. 100 m with LCN-LK cabel
Devices:	max. 5 couplers on LWL side switchable in succession
Repeater function:	Yes

Two-wire bus connection:

Terminals:	screwless
Wire type:	max.1.2 mm Ø
Range:	max. 50 m (total)
Devices:	max. 15 (IS, LLK and/or LLG)

Installation:

Operating temperature:	-10 to 40 °C
Humidity:	max. 80% rel., non condensing
Environmental conditions:	stationary installation according to VDE 632, VDE 637
Degree of protection:	IP 20

Dimensions:

LCN-LLK (W x H x D):	85 x 92 x 66,5 mm 61,5 mm via DIN rail
Space requirement:	5 DU
Installation:	on 35 mm mounting rail (DIN 50022)

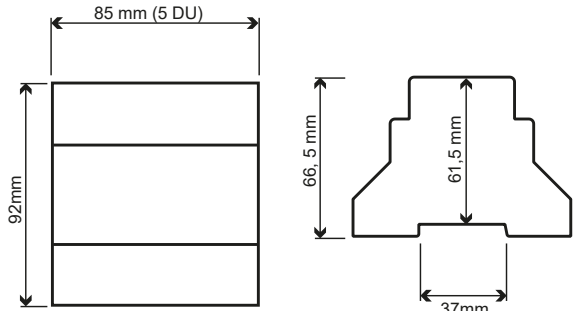

Circuit diagram

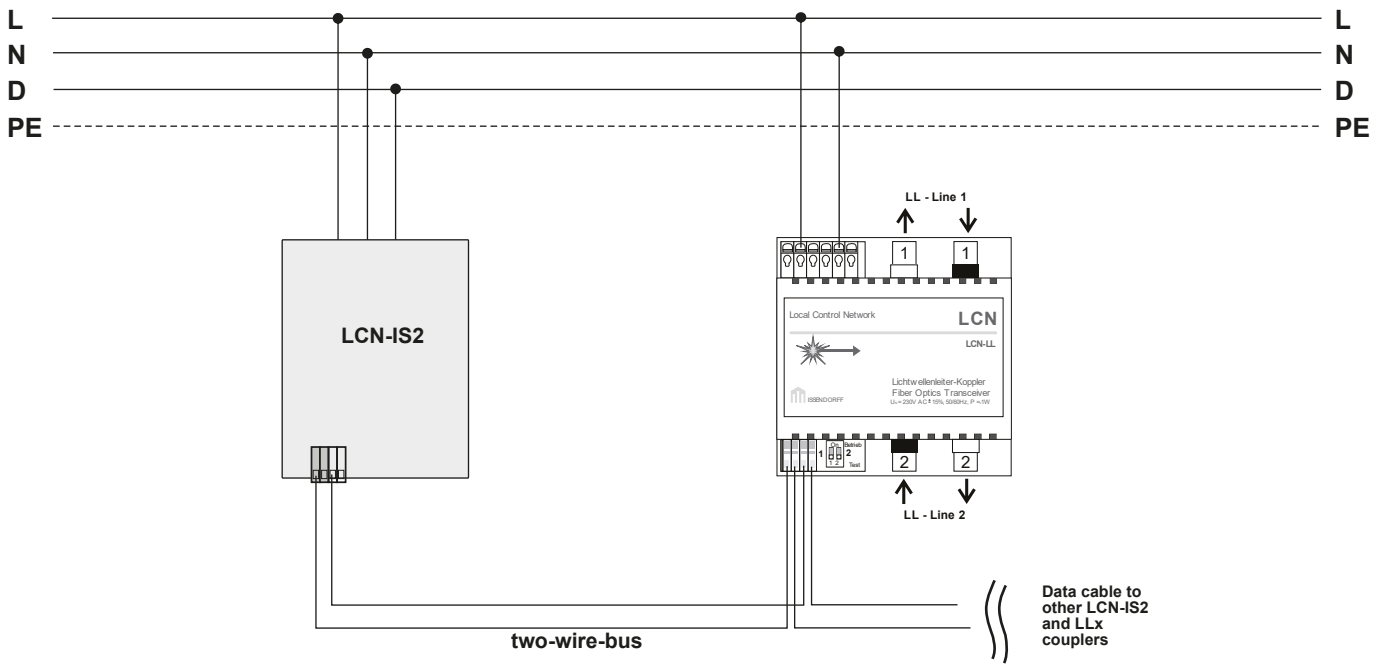

LCN-SK

Segment coupler for DIN rail mounting

The LCN-SK segment coupler is a coupler module for the LCN Bus system connecting up to 120 LCN segments. It is an intelligent bus module and has its own processor with a buffer which guarantees complete data transfer. The individual segment couplers LCN-SK communicate with each other via a symmetrically twisted pair of wires CAT5 or similar, which are galvanically isolated from the other wiring. The connection among the single segment couplers is built up automatically. The internal operating programme can be individually programmed via the LCN software LCN-PRO.

Application fields

The LCN-SK is used in larger systems for coupling several LCN buses with each other. Each single LCN bus consists of a maximum of up to 250 intelligent LCN modules. These LCN modules form an LCN segment. Up to 120 of these single LCN segments can be coupled directly so that over 30,000 intelligent LCN modules can be used on each object. Each module can directly communicate with any other module via the segment bus.

Hardware

- Connections to the LCN bus
- Connections to the LCN segment bus
- Visual display of operating status

Operating programs:

Distinction between global or local messages. Automatic connection installation of the LCN segment bus after voltage switch-on. Individual parametrisation of the data transfer rate according to the power supply units used. Software locking of segment couplers. Automatic assignment of the LCN segment ID, which can be individually adapted to the requirements of the project.

Note:
The LCN segment buses have to be installed in series.

The beginning and the end of the LCN segment bus are to be terminated; the terminal resistances are set using a jumper plug. Installation and connection of the LCN segment couplers must be done according to the regulations for CAT5 cables. The wire has to be stripped at max. two centimeters and the cable twisting to be undone where necessary. The distance depends on the transfer rate and number of the segment couplers. It makes sense to connect the LCN-SK module to the safety power supply. The unused wires in the segment bus line must not be used for external potentials.

LCN-SK

Segment coupler for DIN rail mounting

- **For connecting 2 to 120 LCN segments**
- **Communication over twisted pair like CAT5**
- **Connections for the LCN bus**
- **Connections for the segment bus**
- **LED Status indication**

Technical Data

Connection:

Power supply:	230 VAC ±10%, 50 Hz 110 VAC ±15% type available
Input power:	2 W power consumption
Terminals:	screwless, max. 16 A
Wire type:	Solid or strand wire max. 2.5 mm² or with insulated ferrules max.1.5 mm²

Segment bus connection:

Cable type:	max. 0.8 mm Ø (twisted) at > 100 m: CAT5 cabel

General details:

Operating temperature:	-10 to 40 °C
Humidity:	max. 80% rel., non condensing
Environmental conditions:	stationary installation according to VDE 632, VDE 637
Degree of protection:	IP 20

Dimensions:

LCN-SK (W x H x D):	85 x 92 x 66,5 mm 61,5 mm via DIN rail
Space requirement:	5 DU
Installation:	TH35 on 35 mm mounting rail (DIN 50022)

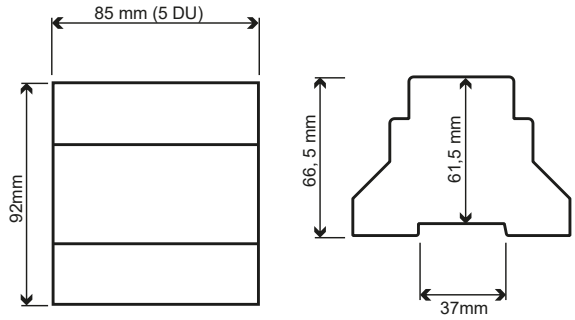

Circuit diagram

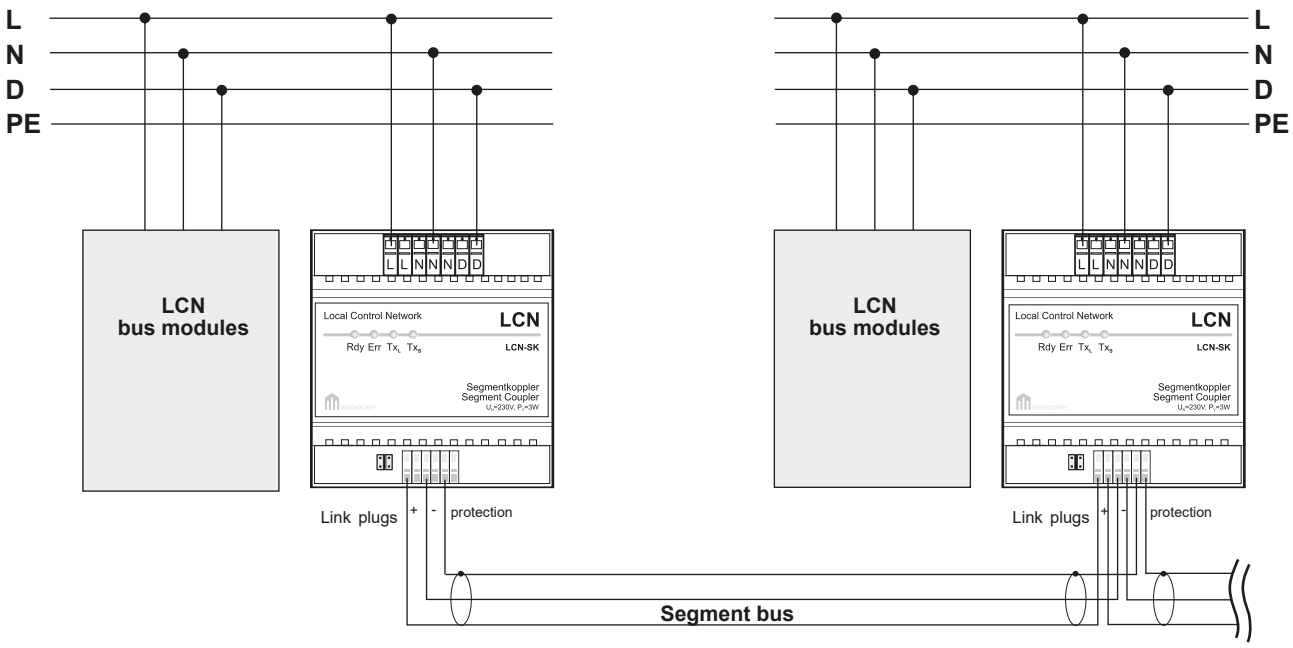

LCN-EGR

EnOcean wireless gateway for flush mounting

The LCN-EGR is an EnOcean gateway to operate with EnOcean inputs, outputs and sensors. It must be connected via the I-port to an intelligent bus module up to firmware 190 512 (Mai 2015). It is possible to connect EnOcean smoke detectors, switches, binary sensors (window contacts), temperature sensors and relays and dimming outputs to operate or control.

Application fields

The LCN-EGR communicates with the connected components via the EnOcean wireless protocol. This protocol is in addition to the products of Eltako (Eltako Wireless Building), also a large number of EnOcean-enabled products support too. The EnOcean gateway is made for the subsequent connection of various devices, such as temperature and brightness sensors, switches and window contacts.

The LCN-EGR is designed for use with the LCN-UPP, LCN-UPU, LCN-UPS or LCN-UMR modules but can also used with LCN-HU, LCN-SH, LCN-SHS and LCN-LD.

Hardware

- LCN-EGR
- I-port cable

Recommended EnOcean Hardware

Eltako
- FBH63TF (motion, light, temperature and humidity sensor)
- FRW (smoke detector)
- FUD70 (dimm)
- FUD71 (dimm)
- FSSA - 230V (radio outlet)
- FSR61NP (impulse relays)
- FSR70W (relay)
- FCO2TF65 (sensor CO2, temperature , ...)
- FSB61NP (shading and blinds)
- FKS - E (small actuator)
- FSR14-2x to FAM14 (2 - channel)
- FUD14 to FAM - 14 (dimmer RS485)

Hoppe
- window handle 0530 / US952 / FK - 410

Kieback & Peter
- MD15 - FTL (wireless small HE actuator)

Note:
Basically all EnOcean devices with the EnOcean Equipment Profiles (EEP) are supported. In individual cases, the Hotline will help in testing. For more detailed information please refer to the installation guide or the online help of the LCN-PRO.

Functionality:

Ranges between transmitters and receivers
The radio signal range is highly dependent on the installation site and the construction of a building.

Material range reduction

Wood, plaster, glass uncoated	0 - 10%
Brick, pressboard	5 - 35%
Concrete with reinforcement of iron	10 - 90%

A reliable building installation is achieved by adequate reserve coverage.

Range: 30 m
Conditions: Big, clear room with best antenna type- and position.

Range: 20 m (planning surety)
Conditions: with furniture and people in the room, through up to 5 plasterboard drywalls or 2 brick / aerated concrete walls: Large, clear with optimum antenna performance and position.

Range: 10 m (planning surety)
Conditions: with furniture and people in the room, through up to 5 plasterboard drywalls or 2 brick / aerated concrete walls:

- Transmitters and receivers installed in wall or corner of the room.
- Receiver with internal antenna
- narrow corridor
- Installation in flush-mounted socket with switch or wire antenna on or near metal

Coverage: Vertical through one or two ceilings
Conditions: Depending on reinforcement and antenna versions

LCN-EGR

EnOcean wireless gateway for flush-mounting

- **For integration to EnOcean components**
- **For operating on the I-Port connection**
- **Up to 5 devices are learnable**

Technical Data

Connection:

Power supply:	110 - 230 VAC, 50/60 Hz optional 110 VAC
Consumption:	Pmax.= 2.5 W, Pv 0.3 W
LCN-port:	I-Port up to firmware 190512 for bidirectionally communication
Frequency:	868 MHz
EnOcean:	Max. 5 devices can be taught depending on the type

General details:

Operating temperature:	10 to 40 °C
Humidity:	max. 80% rel., non condensing
Environmental conditions:	Stationary installation according to VDE 632,VDE 637
Degree of protection:	IP 20 when installed in a deep flush-mounted box

Dimensions:

LCN-EGR (Ø x H):	50 x 20 mm
Installation:	decentralized installation in deep flush-mounted box

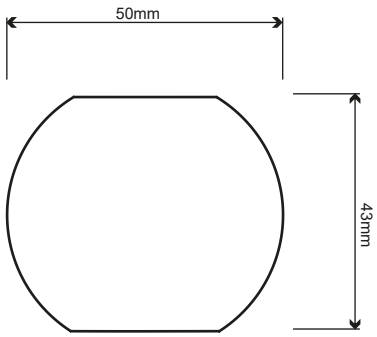

Circuit diagram

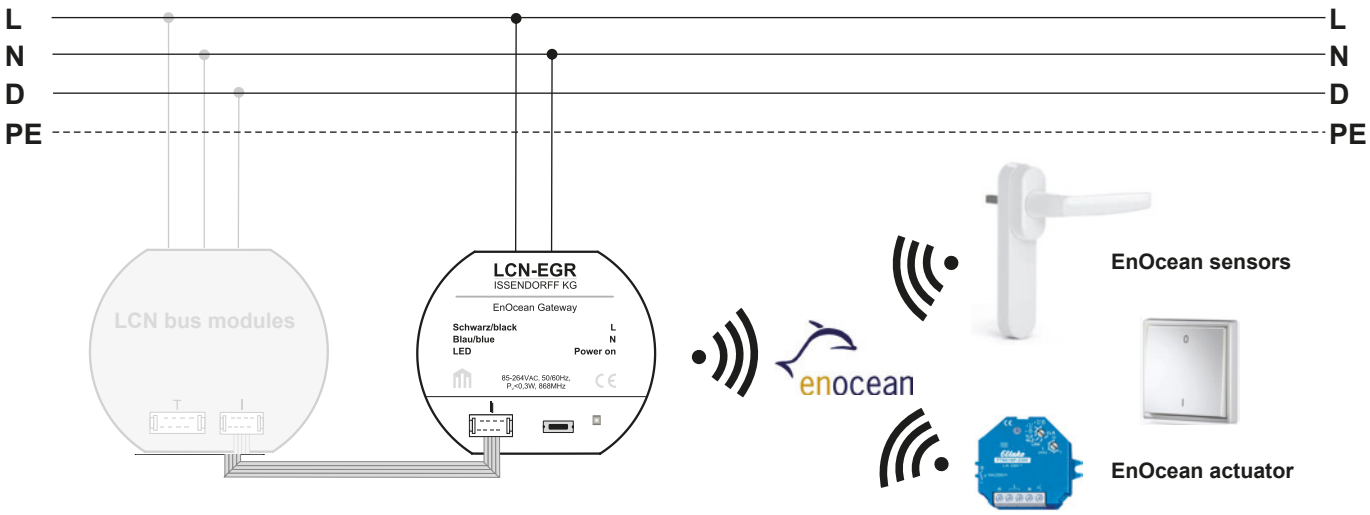

LCN | Remote Controls

LCN-RR

Infrared receiver with lens

The LCN-RR is an infrared remote control receiver for the LCN system and can be connected to all the intelligent LCN bus modules: LCN-UPP LCN-UPU, LCN-UMR, LCN-SH, LCN-HU or LCN-LD. The LCN-RR receives up to 48 commands, 1,000 access codes and 16 million key codes.

Application fields

The LCN-RR is a remote control receiver for the LCN system. Due to its size it can be integrated into the switch program as well as into the lights. Additionally, it provides comfortable access control with up to 16 million key codes.

Hardware

- infrared sensor
- Flat cable with plug for the I-Port connection to the intelligent bus module

Note:
The LCN-RR's supply cable can be extended up to 50 meters via the LCN-IV and can be connected together with the LCN-PMI, LCN-B3I etc. The installation location has crucial influence on the reception range. When used outside, the receiver is to be shielded from daylight as this otherwise affects the range. For more detailed information please refer to the installation guide.

LCN-RR

Infrared receiver with lens

- **Receives up to 48 commands, 1000 access codes and 16 million key codes**
- **For LCN-RT remote controls**
- **With I-Port connection**

Technical Data

Operating frequency:	40 kHz
General details:	
Operating temperature:	-20 to 60 °C
Humidity:	max. 80% rel., non condensing
Environmental conditions:	stationary installation
Degree of protection::	IP 20

Dimensions:

Diode (W x H x D)	6 x 6 x 7 mm
Supply Cable:	300 mm
Dimensions Fitted Lens	14 x 10 mm
Assembly:	behind a switch cover/panel, behind a 4 mm Ø hole or with the installation casing

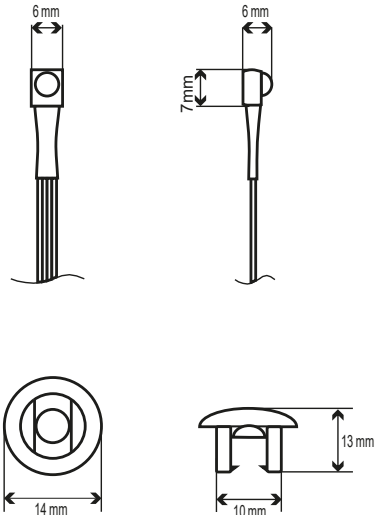

Circuit diagram

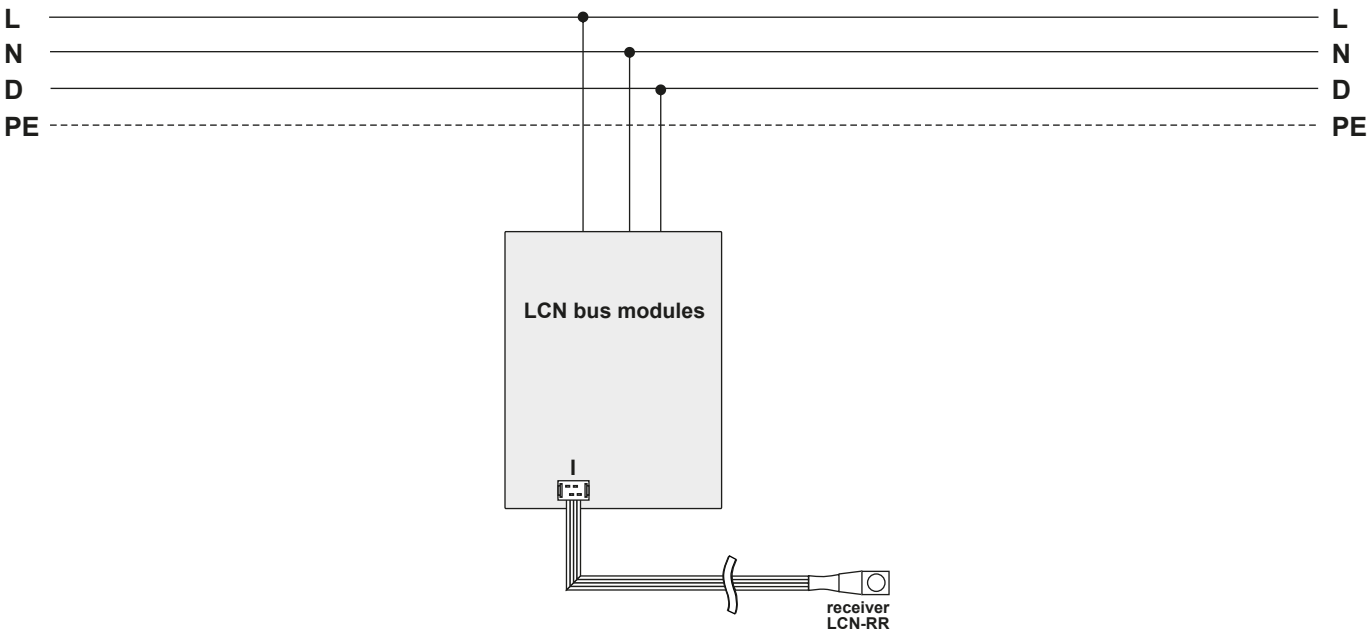

LCN-RT

IR transmitter with four keys

The LCN-RT is a miniaturized infrared (IR) hand-held transmitter. It offers four very robust membrane keys with acoustic signalling of activation. Each key sends the commands Short, Hold and Release, which means that up to twelve commands can be used per key level. At the user´s request, up to four key levels can be chosen resulting in 48 commands. The LCN-RT additionally offers three different set-up options: privileged control, locking systems and access control systems. In doing so, a code entered by the user is transmitted to the receiver along with their serial number.

Application fields

Due to its small size the LCN-RT is suitable for putting on a keyring or belt. In this way it becomes part of the daily routine as a substitute for conventional switch panels. Using the LCN-RR receiver, all of the LCN modules on the bus system can be controlled with all of their functions, including default values for air-conditioning control etc. In addition to this, locking systems can be operated with the remote control transmitter and/or access control with personal identification can also be implemented.

Hardware

- Four keys
- Four key levels
- Acoustic signalling

Operating programs:

Transfers 48 Bit information, four times as much as conventional hand transmitters. Each key recognises the commands, Short, Hold and Release. It supports four key fields, so that up to 16 keys are available to the user. With each operation it sends a code which can be programmed by the user. All of the bus modules can evaluate the code and allow or refuse the request. Additionally, it sends a unique and permanently fixed serial number. This number can either be evaluated in the LCN modules for individual allotting of keys and/or can be forwarded to the PC for access control with personal identification. A checksum is generated and sent with the transmission. It enables the receiver to recognise transmission interference and prevents false operation, an innovation in IR remote control technology.

Note:
Any amount of transmitter/receiver pairs can be independently operated in the same room. Also available in a left handed version. Please specify when ordering.

LCN-RT

IR transmitter with 4 keys

- **Range of up to 10 meters**
- **Four very robust foil keys**
- **Acoustic feedback when key is pressed**
- **For use with the LCN-RR**
- **Also available as left-handed version: LCN-RTL**

Technical Data

Range:	at least 10 m
Transmitting cone:	20° symmetric rotation
Keys:	4 x 4 key levels
Code:	four digits - user defined additionally serial number
Battery:	Lithium cell CR2032, lasts about 2 years

General details:

Operating temperature:	-10 to 40 °C
Humidity:	max. 80% rel., non condensing
Degree of protection::	IP 20

Batteries are not to dispose in household waste

Dimensions:

LCN-RT (H x W x D)	58 x 38 x 9 mm
Assembly:	on your keyring

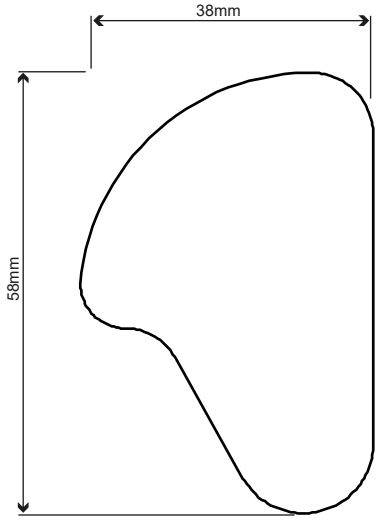

Changing the key levels:

The four keys on the LCN-RT can be used in four different levels, so a total 16 keys are available.

Level 1 (keys 1-4): Standard level
Level 2 (keys 5-8): Press keys 2 and 4 simultaneously
Level 3 (keys 9-12): Press keys 3 and 4 simultaneously
Level 4 (keys 13-16): Press keys 1 and 3 simultaneously

A long beep confirms the successful level change. The transmitter signals are louder when used by key level 2, 3 or 4. Four seconds after pressing the last key it will return automatically to the standard level. This will be alerted by a short beep.

Circuit diagram

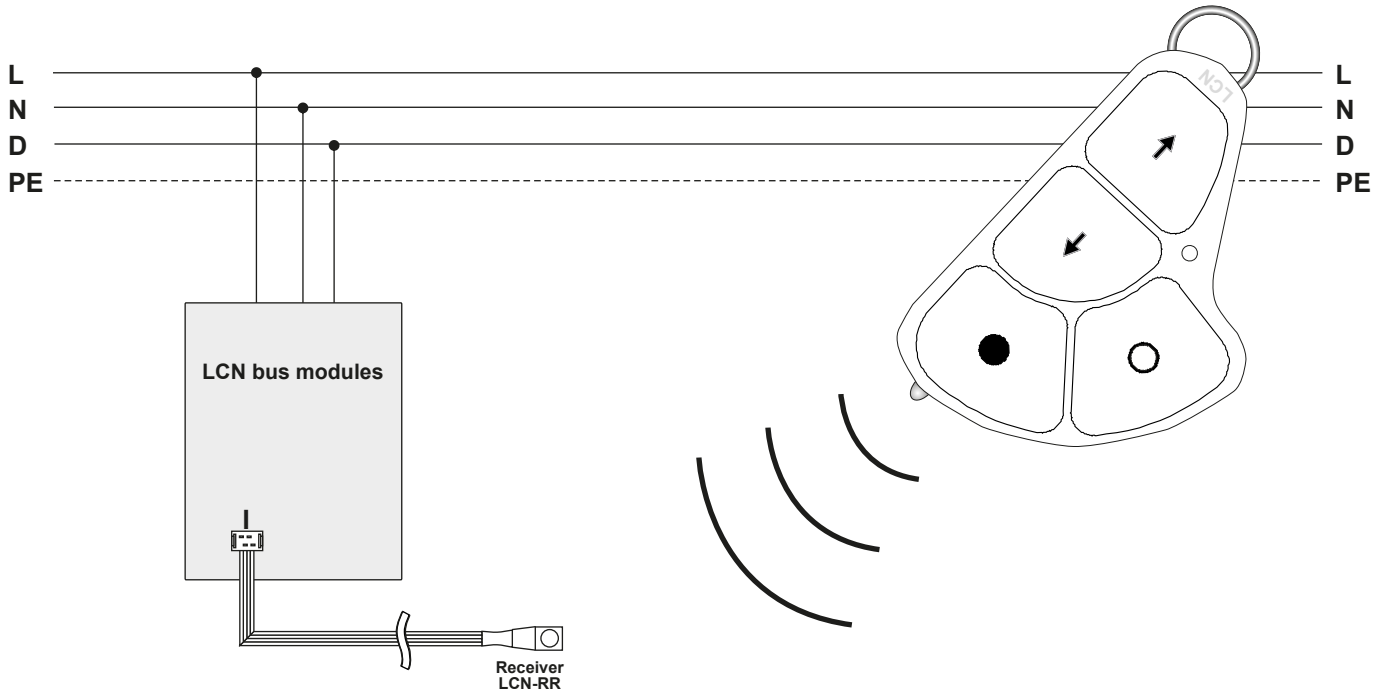

LCN | Key Sensors

LCN-GT2 | LCN-GTS2

Glass touch keypad with two capacitive keys

The LCN-GT2 is a sensor touch panel connected via the I-Port of any LCN module of version 1403 or higher (March 2010). It is designed for mounting in a flush mounted wall-box and can be fixed firmly on the wall by means of a special mounting plate.

design examples

Description

The capacitive sensor surfaces are positioned behind a 4 mm (3mm) thick glass panel. Slight contact with the surface is sufficient to trigger various functions. The intelligent control system distinguishes between tapping, prolonged contact and releasing of the keys, with the result that three commands (Short, Hold & Release) are possible per key. A status LED which is integrated into every sensor reports on the current status of any actuator or sensor in the building with 4 indicator modes. The touch panel sensor pads can be labelled individually and easily changed if necessary. Blue background illumination on the sensors (optional) allows the LCN-GT(S)2 to be used comfortably with low room lighting. The individual labelling of the sensor surfaces can be transferred to paper/film and placed behind the glass panel. This labelling can be replaced at any time, which means changes to the key assignment are no problem.

Application fields

The LCN-GT2 is for mounting in interior dry rooms. It can be used for every switch, regulator and operational task within the LCN bus system. It is especially suited to the design orientated user who demands high performance and comfort. Up to four LCN-GT(S)2 can be operated via the same module in parallel.

Scope of delivery

- LCN-GT(S)2 in black or white, other colours available on demand
- Mounting plate with adapter for connecting
- Printing foil
- Installation guide

Function:

The sensor surfaces of the LCN-GT(S)2 react capacitively to the touching of the glass front. According to how long the glass panel is being touched, a corresponding LCN-command Hit, Hold or Release is sent. The command is sent via the mounting adapter to the I-port of an LCN module. The two integrated status LEDs in the sensors are individually controlled via the I-Port and the LCN-PRO configurated On, Off, Flashing, Flickering. For the Corona® Light and the background illumination of the sensors an external power supply is required (LCN-NUI, not included in the scope of delivery). The use of an external power supply unit enhances the intensity of the LEDs.

Models:

LCN-GT2
Size: 90 x 90 mm

Colour:	white	LCN-GT2W
	black	LCN-GT2B
	champagne	LCN-GT2C

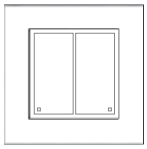

LCN-GTS2
Size: 75 x 75 mm

Colour:	white	LCN-GTS2W
	black	LCN-GTS2B
	champagne	LCN-GTS2C

Note:
Attention: Connect without power!

During installation, the sensors‘ electronics can be destroyed by the lighting power supply if the cable comes in contact with the wrong terminal. The power supply LCN-NUI is to be switched off before connecting the LCN-GT(S)2.

LCN-GT2 | LCN-GTS2

Glass touch keypad with two capacitive keys

- **Two capacitive sensor surfaces behind glass**
- **Two status LED´s**
- **Including white Corona surrounding light**
- **Including key background light**
- **Including designing the keys with inlays**
- **For operating on the I-Port**

Technical data

Connection

Power supply:	5 VDC stabilised, via LCN-NUI
LCN-Connection:	Via adapter socket to the I-Port of an LCN module starting with firmware 140719

Keys:

Type:	2 capacitive sensor surfaces with status LED behind glass
Function:	Hit, Hold, Release

LEDs:

Status-LED´s:	2 red LED´s, command controlled
Function:	On, Off, Flashing, Flickering
Background illuminations:	Blue LED´s, one for each sensor surface -
Function:	off/on
Corona®-Light:	white Corona® LEDs
Function:	individually adjustable On, Off, Flashing, Flickering

General details:

Operating temperature:	-10 to 40 °C
Humidity:	max. 80% rel., non condensing
Environmental conditions:	Stationary installation according to VDE 632, VDE 637
Degree of protection:	IP 20

Dimensions:

LCN-GT2 (H x W x D):	90 x 90 x 13 mm (4 mm glass thickness)
LCN-GTS2 (bevelled edges):	75 x 75 x 11 mm (3 mm glass thickness)
Assembly:	With mounting plate for a flush mounted wall-box.
Frame:	Available in white, black and champagne, special customized colours on request.

LCN-GT2

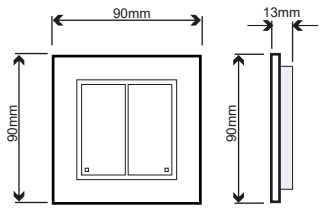

LCN-GTS2

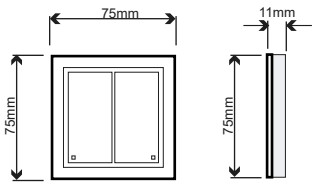

Circuit diagram

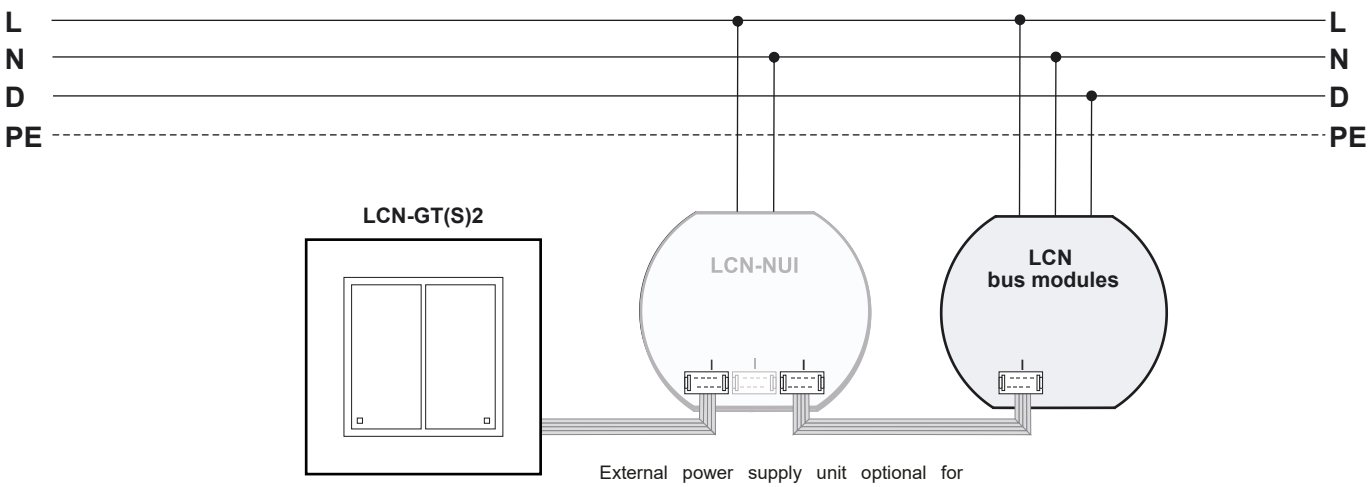

External power supply unit optional for background illumination and Corona®-Light.

LCN-GT6 | LCN-GTS6

Glass touch keypad with six keys and six LEDs

The LCN-GT(S)6 is a sensor touch panel. It is connected to the mounting plate and attached to a flush mounted wall box firmly fixed with two sliding hooks. It is connected to the T-Port of any LCN module as of version 1706. The integrated temperature sensor allows the user to control the temperature.

design examples

Description

The six capacitively operated sensor surfaces are arranged behind a 4 mm (3mm) glass front. A light touch of the glass front is all that is needed to trigger the different functions. The intelligent control distinguishes between Hit, Hold and Release, so that three commands are possible for every key.

An LED which is integrated into every sensor reports on the current status of any actuator or sensor in the building with 4 indicator modes. The touch panel sensor pads can be labelled individually and easily changed if necessary. Blue background illumination on the sensors (optional) allows the LCN-GT6 to be used comfortably with low room lighting.

The individual inlays for the LCN-GT(S)6 are printed on foil/membrane or paper and fitted behind the glass front through a small slot. The labelling can be changed at anytime so that changes to the key functions do not create a problem. Easy to understand symbols and templates come delivered with the LCN-GT6.

Application fields

The LCN-GT(S)6 is for mounting in interior dry rooms. It can be used for every switch, regulator and operational task within the LCN bus system. It is especially suited to the design orientated user who demands high performance and comfort.

Scope of delivery

- LCN-GT(S)6 in black or white, other colours available on request
- Mounting plate with adapter for connecting
- Printing foil
- Installation instructions

Note:
Attention: Connect without power !

During installation, the sensor´s electronics can be destroyed by the power supply for the lighting when the cable comes in contact with the wrong terminal. The power supply LCN-NUI has to be switched off before connecting the LCN-GT(S)6. For more detailed information please refer to the installation guide.

Function:

The sensor surfaces of the LCN-GT(S)6 react capacitive to the touching of the glass front. Acording how long the glass panel is touched, a corresponding LCN-Comand Short, Hold or Release is sent. The comand is sent over the mounting plate to the T-Port of an LCN module

The six intergrated status-LEDs in the sensors are individualy controlled via the T-Port, and with the LCN-PRO configurated as On, Off, Flashing or Flickering. The integrated temperature sensor allows the user to control the temperature. For the optional back lighting is a external power supply (LCN-NUI) required. Not within the scope of delivery. The use of a power supply is also, by bright area lighting useful: because it rases the brightness of all six LEDs of the LCN-GT(S)6.

Models:

LCN-GT6
Size: 90 x 90 mm

Colour:	white	LCN-GT6W
	black	LCN-GT6B
	champagne	LCN-GT6C

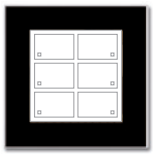

LCN-GTS6
Size: 75 x 75 mm

Colour:	white	LCN-GTS6W
	black	LCN-GTS6B
	champagne	LCN-GTS6C

Further examples of key-mapping variations

LCN-GT6 | LCN-GTS6

Glass touch keypad with six keys and six LEDs

- **Six capacitive sensor surfaces behind glass**
- **Six status LED´s**
- **Including white Corona surrounding light**
- **Including key background light**
- **Including integrated temperature sensor**
- **Including designing the keys with inlays**
- **For operating on the T-Port**

Technical data

Connection

Power supply:	6 capacitive sensors with status LEDs behind glass
Function:	Hit, Hold, Release
Labelling:	Labelling membrane/foil

LEDs:

Status-LEDs:	6 red LEDs, command-controlled
Function:	On, Off, Flashing, Flickering
Background illuminations:	blue LED´s, one for each sensor surface -
Function:	off/on
Corona® LED´s:	white Corona® light for decorative accent lighting

Connection

Power supply:	Via the LCN module; Background illumination (optional) via external power supply unit LCN-NUI
LCN-Connection:	Via adapter socket to the T-port of the LCN module

Temperature sensor:

Measurement range:	-10 to 40 °C
Resolution:	0.1 °C
Accuracy:	0.3 °C from 15 to 30 °C

General details:

Operating temperature:	-10 to 40 °C
Humidity:	max. 80% rel., non condensing
Environmental conditions:	Stationary installation according to VDE 632, VDE 637
Degree of protection:	IP 20

Dimensions:

LCN-GT6 (H x W x D):	90 x 90 x 13 mm (4 mm glass thickness)
LCN-GTS6 (bevelled edges):	75 x 75 x 11 mm (3 mm glass thickness)
Assembly:	With mounting plate for a flush mounted wall-box.
Frame:	Available in white, black and champagne, special customized colours on request.

LCN-GT6

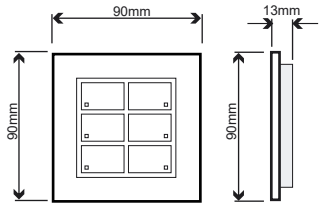

LCN-GTS6

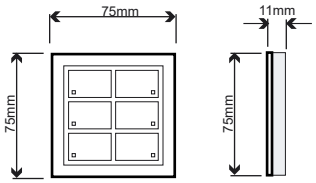

Circuit diagram

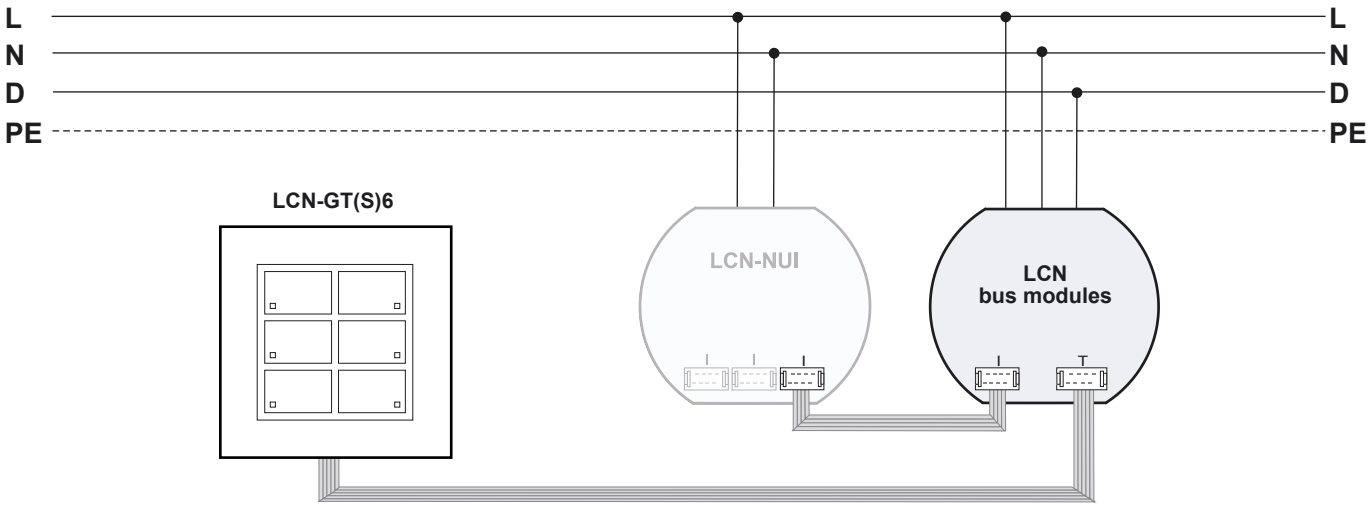

External power supply unit optional for background illumination and Corona®-Light.

LCN-GT8 | LCN-GTS8

Glass touch keypad with eight keys, bargraph and temperature sensor

The LCN-GT8 is a sensor touch panel with a bargraph display. It is connected to the mounting panel and a deep flush mounted wall-box and firmly fixed with two sliding hooks. It connects to the T-Port of any LCN modules as of version 1706... . The integrated temperature sensor supplies the measured values with a triggering from 0.1 °C, and thanks to its adaptive average calculation, practically noiseless.

design examples

Description

The eight capacitive sensor surfaces are located behind a 4 mm resp. 3 mm glass front. A light touch of the glass front is all that is needed to trigger the different functions. A status LED which is integrated into every six sensors reports on the current status of any actuator or sensor in the building with four indicator modes. ®Corona surrounding light with white LEDs, serves as a decorative wall light (LCN-NUI required) and can be switched as a decent orientation light, so that the LCN-GT8 or LCN-GTS8 can also be operated in darkness. An external power supply is required when operating the key background LEDs and the ®Corona surrounding light. Please order LCN-NUI separately. The individual inlays for the LCN-GT(S)8 are printed on foil/membrane or paper, and fitted behind the glass front through a small slot. The labelling can be changed at anytime so that changes to the key functions do not create a problem. Easy to understand symbols and templates come delivered with the LCN-GT(S)8.

Application fields

The LCN-GT8 is for mounting in interior dry rooms. It can be used for every switch, regulator and control function within the LCN bus system. The integrated temperature sensor allows the user to control the temperature. It is especially suited to the design orientated user who demands high performance and comfort.

Scope of delivery

- LCN-GT8
- Mounting plate
- Printing foil
- Installation guide

Note:
Attention: Connect without power !

The power supply LCN-NUI is to be switched off before connecting the LCN-GT(S)8. For more detailed information please refer to the installation guide.

Function:

The sensor surfaces of the LCN-GT(S)8 react capacitively to the glass front being touched. According to how long the glass panel is touched, a corresponding LCN command Short, Hold and Release is sent. The command is sent via the mounting panel to the T-Port of an LCN module. The eight status LED´s integrated in the sensors are individually controlled via the T-Port and configured via the LCN-PRO, On, Off, Flashing, Flickering.

The 15 digit bargraph display can show analogue values in an adjustable value area. Flashing mode helps to illustrate the difference between ACTUAL and DESIRED values. For the Corona® light and the background illumination of the sensors an external power supply is needed (LCN-NUI, not included in the scope of delivery). The use of an external power supply unit enhances the intensity of the LED´s.

Models:

LCN-GT8
Size: 90 x 90 mm

Colour:	white	LCN-GT8W
	black	LCN-GT8B
	champagne	LCN-GT8C

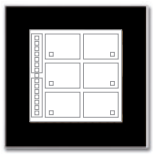

LCN-GTS8
Size: 75 x 75 mm

Colour:	white	LCN-GTS8W
	black	LCN-GTS8B
	champagne	LCN-GTS8C

Further examples of key-mapping variations

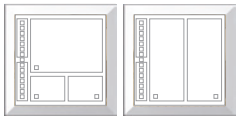

LCN-GT8 | LCN-GTS8

Glass touch keypad with eight keys, bargraph and temperature sensor

- **Eight capacitive sensor surfaces behind glass**
- **Six status LED´s & bargraph**
- **Including white Corona surrounding light**
- **Including key background light**
- **Including integrated temperature sensor**
- **Including designing the keys with inlays**
- **For operating on the T-Port**

Technical data

Connection

Power supply:	via the LCN module, background illumination (optional) via external power supply unit LCN-NUI
LCN connection:	T-Port

Keys:

Type:	8 capacitive sensor areas behind 5 mm glass (6 keys with Status-LED)
Function:	Short, Hold, Release
Labelling:	Labelling membrane/foil

LEDs:

Status-LED´s:	6 red LED´s, command controlled
Function:	On/Off/Flashing/Flickering
Background illumination:	white surface illumination
Corona® LEDs:	white Corona® light for decora tive accent lighting
Analog value-display:	15 LED´s arranged as bargraph, desired/actual value display

Temperature sensor:

Measurement range:	-10 to 40 °C
Resolution:	0.1 °C
Accuracy:	0.3 °C from 15 to 30 °C

General details:

Operating temperature:	-10 to 40 °C
Humidity:	max. 80% rel., non condensing
Installation:	Stationary installation according to VDE 632, VDE 637
Degree of protection:	IP 20

Dimensions:

LCN-GT8 (H x W x D):	90 x 90 x 13 mm (4 mm glass thickness)
LCN-GTS8 (bevelled edges):	75 x 75 x 11 mm (3 mm glass thickness)
Assembly:	With mounting plate for a flush mounted wall-box.
Frame:	Available in white, black and champagne, special customized colours on request.

LCN-GT8

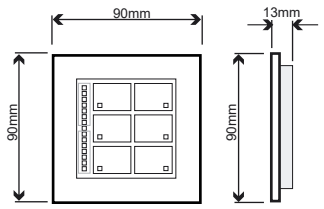

LCN-GTS8

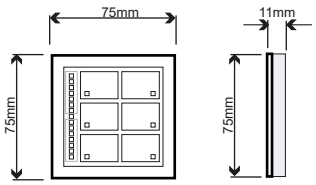

Circuit diagram

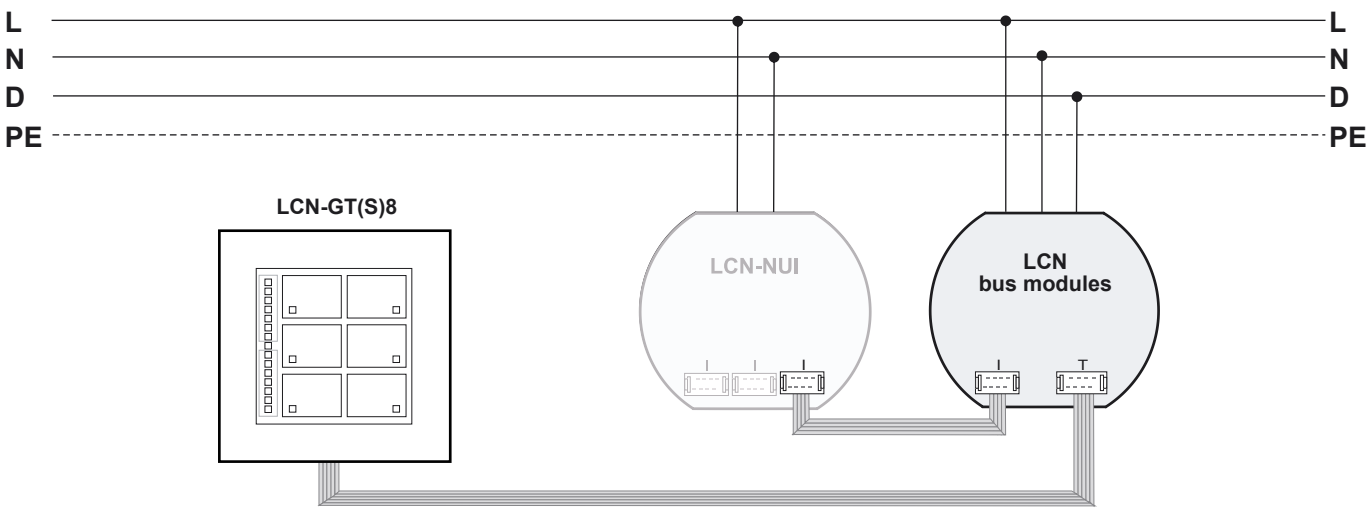

External power supply unit optional for background illumination and Corona®-Light.

LCN-GT12 | LCN-GTS12

Glass touch keypad with 12 keys and 12 LEDs plus bargraph

The LCN-GT(S)12 is a sensor touch panel with a bargraph display. It is connected to the mounting panel and a standard double flush mounted wall-box and firmly fixed with two sliding hooks. It connects to the T-Port of any LCN modules. The integrated temperature sensor allows the user to control the temperature.

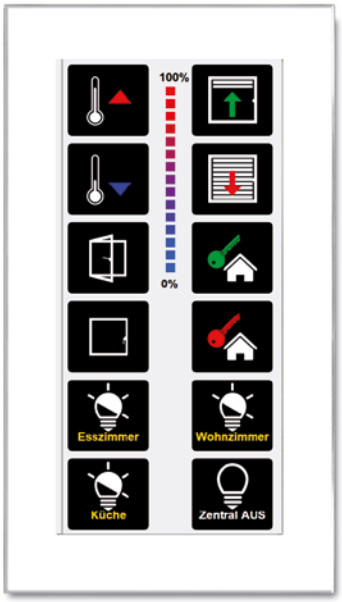

design examples

Description

The 12 capacitive sensor surfaces are located behind a 4 mm resp. 3 mm glass front. A light touch of the glass front is all that is needed to trigger the different functions. The intelligent control distinguishes between Short, Hold and Release so that three commands are possible for every key.

An LED which is integrated into every sensor indicates the current status of any actuator or sensor in the building using four indicator modes. The touch panel sensor pads can be labelled individually and changed easily. Blue optional background illumination on the sensors allows the LCN-GT(S)12 to be used comfortably with low room lighting.

The 15 digit bargraph display enables analogue ACTUAL and DESIRED values to be displayed.The individual labels for the LCN-GT(S)12 are printed on foil/membrane or paper, and fitted behind the glass front through a small slot. The labelling can be changed at anytime so that changes to the key functions do not create a problem. Easy to understand symbols and templates come delivered with the LCN-GT(S)12.

Application fields

The LCN-GT(S)12 is for mounting in interior dry rooms. It can be used for every switch, regulator and control function within the LCN bus system. It is especially suited to the design orientated user who demands high performance and comfort.

Scope of delivery

- LCN-GT(S)12 in black or white, other colours available on request
- Mounting plate with adapter for connecting
- Printing foil
- Installation instructions

Note:
Attention: Connect without power ! During installation, the electronics of the sensors can be destroyed by the lighting power supply if the cable comes in contact with the wrong terminal. The power supply LCN-NUI is to be switched off before connecting the LCN-GT(S)12. For more detailed information please refer to the installation guide.

Further examples of key-mapping variations

Function:

The sensor surfaces of the LCN-GT(S)12 react capacitively to the glass front being touched. According to how long the glass panel is touched, a corresponding LCN command Short, Hold and Release is sent. The command is sent via the mounting panel to the T-Port of an LCN module. The 12 status-LED´s integrated in the sensors are individually controlled via the T-Port and configured via the LCN-PRO as On, Off Flashing and Flickering.

The 15 digit bargraph display can show analogue values in an adjustable value area. Flashing mode helps to illustrate the difference between ACTUAL and DESIRED values. The integrated temperature sensor allows the user to control the temperature. Including an LED light corona with white LED´s for decorative accent lighting and backlighting (optional with the power supply LCN-NUI).

Models:

LCN-GT12
Sizee: 90 x 160 mm

Colour:	white	LCN-GT12W
	black	LCN-GT12B
	champagne	LCN-GT12C

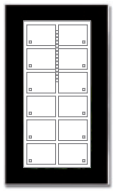

LCN-GTS12
Size: 75 x 145 mm

Colour:	white	LCN-GTS12W
	black	LCN-GTS12B
	champagne	LCN-GTS12C

LCN-GT12 | LCN-GTS12

Glass touch keypad with 12 keys and 12 LEDs plus bargraph

- **Twelve capacitive sensor surfaces behind glass**
- **Twelve status LED´s & bargraph**
- **Including white Corona surrounding light**
- **Including key background light**
- **Including integrated temperature sensor**
- **Including designing the keys with inlays**
- **For operating on the T-Port**

Dimensions:

LCN-GT12 (W x H x D):	90 x 160 x 13 mm (4 mm glass thickness)
LCN-GTS12 (bevelled edges):	75 x 145 x 11 mm (3 mm glass thickness)
Assembly:	With mounting plate to a double flush mounted wall-box.
Frame:	Available in white, black and champagne, special customized colours on request.

LCN-GT12

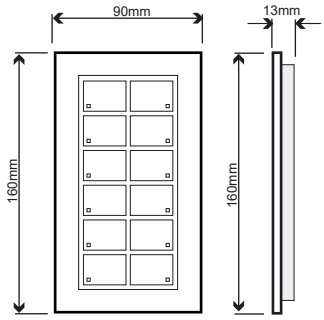

LCN-GTS12

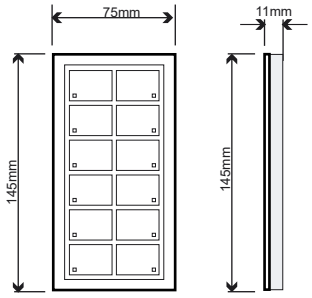

Technical data

Keys:

Type:	12 capacitive sensors with status-LEDs behind glass Short, Hold, Release
Labelling:	Labelling membrane/foil

LED´s:

Status-LED´s:	6 red LED´s, command controlled
Function:	On/Off/Flashing/Flickering
Background illumination:	blue LEDs, one for each sensor surface
Function:	off/on
Corona® LED´s:	white Corona® light for decorative accent lighting
Analog value-display:	15 LED´s arranged as bargraph, desired/actual value display

Connection

Power supply:	Via the LCN module; Background illumination (optional) via external power supply unit LCN-NUI
LCN-Connection:	Via adapter socket to the T-port of the LCN module

Temperature sensor:

Measurement range:	-10 to 40 °C
Resolution:	0.1 °C
Accuracy:	0.3 °C from 15 to 30 °C

General details:

Operating temperature:	-10 to 40 °C
Humidity:	max. 80% rel., non condensing
Environmental conditions:	Stationary installation according to VDE 632, VDE 637
Degree of protection:	IP 20

Circuit Diagram

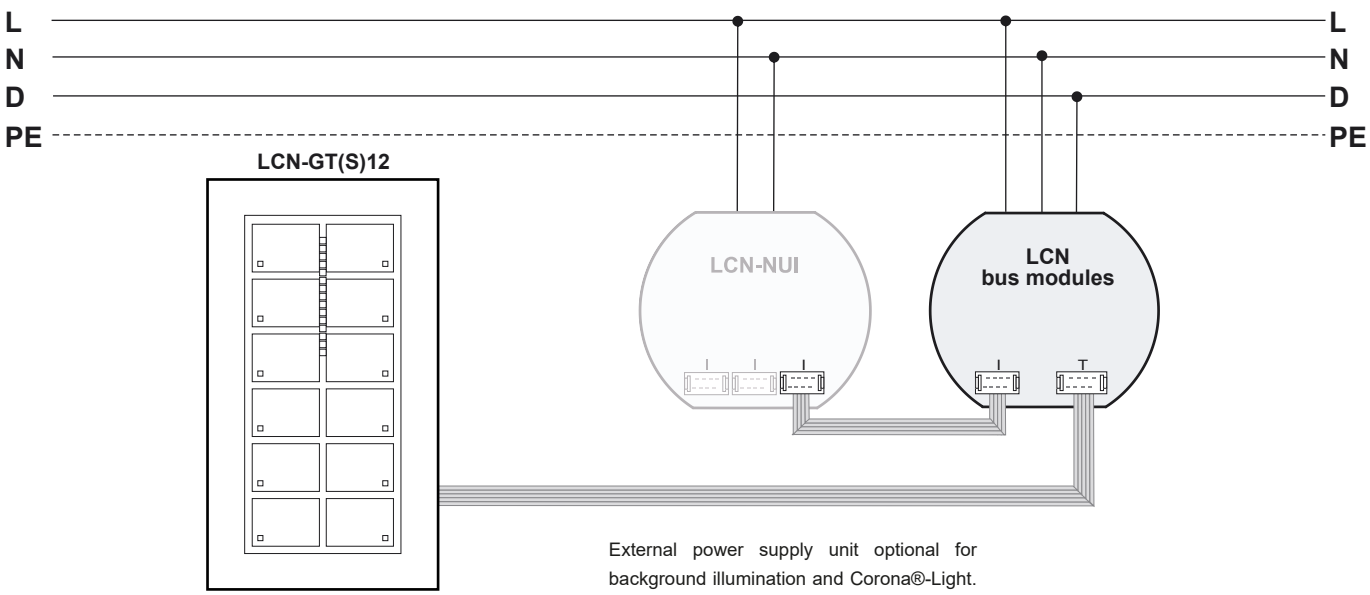

External power supply unit optional for background illumination and Corona®-Light.

LCN-GT6L

Glass touch keypad with with six keys and Corona® light

The LCN-GT6L is a slim sensor keypad with particularly easy-to-use keys that also offer a slider function. It is mounted and anchored to a lamp outlet box by means of a mounting plate. It occupies the I connection of any LCN module and is powered with the LCN-NUI power supply unit.

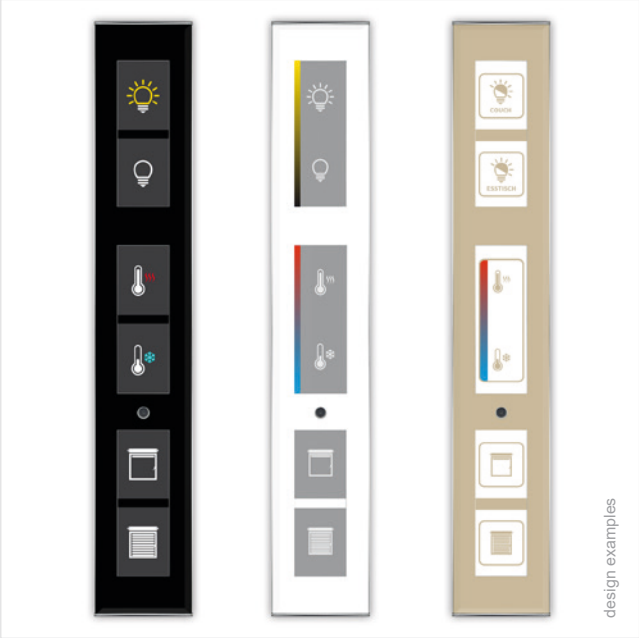

Description

The six capacitive sensor surfaces are arranged behind a 5 mm thick glass front. They can be used as six- or three-fold push buttons with slider function. In addition, two red status LEDs are integrated for each sensor surface. An individual inscription on the sensor surfaces can be transferred to paper or foil and placed behind the glass surface. This inscription can be exchanged at any time, so that changes in the key assignment are no problem.

The LCN-GT6L also offers 26 white corona LEDs for wall illumination as a halo of light. The individual sensor surfaces are backlit in white. All LEDs, as well as the corona LEDs, can be controlled as desired. This makes the LCN-GT6L easy to operate even in low ambient light. The integrated remote control receiver LCN-RR reacts to LCN-coded IR remote controls.

Application fields

The LCN-GT6L is designed for installation in dry interiors. It can be used for all switching, regulating and control tasks in the LCN bus. It is particularly suitable for design users with the highest demands on function and comfort.

Scope of delivery:

- LCN-GT6L
- LCN-NUI power supply unit
- I-Port connection cable
- Mounting plate
- Two LCN-IV
- Installation guide

Function

The sensor surfaces of the LCN-GT6L react capacitively to contact with the glass surface. Depending on the duration of the touch, a corresponding LCN control command is sent Short, Long or Batch. The control command is transmitted to the I connection of an LCN module via the mounting plate included in the scope of delivery..

Overview status and operation LEDs

1. Status LEDs - RED

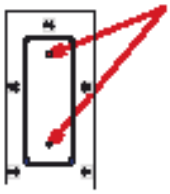

2. Key lighting - WHITE

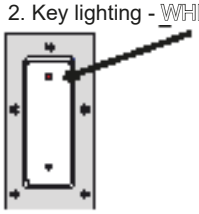

3. Corona®-Ligt - WHITE

Note:
Attention: plug in without voltage! Switch off the LCN-NUI power supply unit before plugging on the LCN-GT6L. For more detailed information please refer to the installation guide.

Models

LCN-GT6L
Size: 50 x 300 mm

Colour:	white	LCN-GT6LW
	black	LCN-GT6LB
	champagne	LCN-GT6LC

LCN-GT6L

Glass touch keypad with with six keys and Corona® light

- **Six- or threefold button with slider function**
- **Capacitive sensor surfaces behind 5 mm glass**
- **Including white corona light wreath**
- **Integrated IR receiver**
- **Mounting on 35 mm lamp outlet box**
- **Operation at I connection**

Technical data

Connection

Power supply:	via LCN module + external supply unit LCN-NUI
LCN-Connection:	I-Port (from version 140601)

Keys

Type:	6 keypads for digital labelling with status LED behind glass
Function:	Short, Hold, Release

IR recetion

Function:	max. 32 keys, access control

LED´s

Status-LEDs:	6 red LEDs for display of LCN status messages,
Function:	OFF/FLASHING/FLICKERING/ON
Keys- LEDs:	Area light guide for each sensor field
Corona-LED:	white corona LEDs controllable via command „LED Brightness“,
Function:	Off/50%/75%/On

General details:

Operating temperature:	-10 to 40 °C
Humidity:	max. 80% rel., non condensing
Environmental conditions:	Stationary installation according to VDE 632, VDE 637
Degree of protection:	IP 20

Dimensions:

LCN-GT6L (W x H x D):	50 x 300 x 12 mm
Assembly:	With mounting plate for a flush mounted wall-box.
Frame:	Available in white, black and champagne, special customized colours on request.

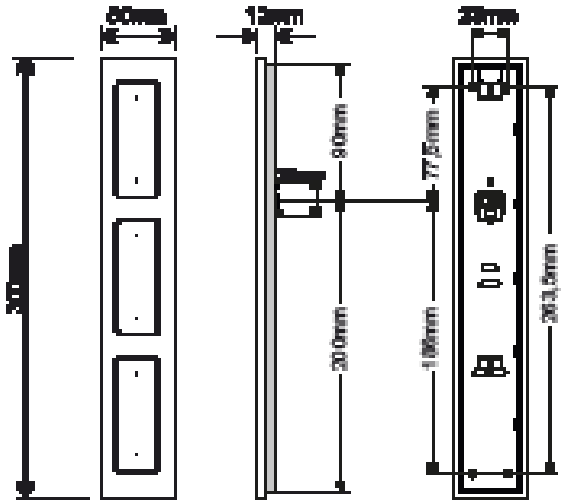

Circuit Diagram

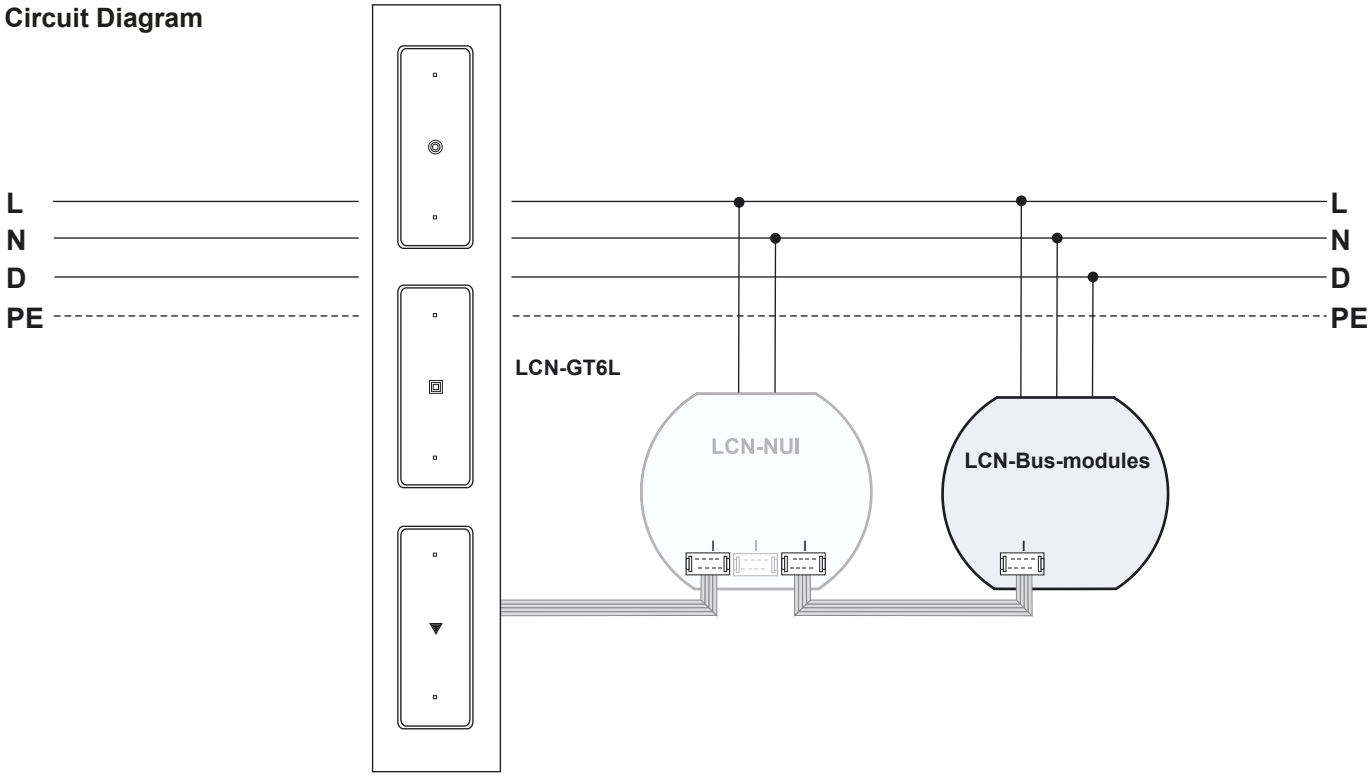

ISSENDORFF KG Magdeburger Str.3 30880 Laatzen - Germany Tel: +49 5066 99 80 www.LCN.eu

LCN-GT4D | LCN-GTS4D

Information keypad with 2.8'' graphic display and four capacitive keys

The LCN-GT(S)4D is an info touch keypad with a TFT-Display. It is designed for mounting into a flush mounted wall-box and is fixed firmly to the wall with plastic slide-fittings. The LCN-GT4D is meant for use in interior dry rooms. It can be used for every switch, regulator and control task within the LCN bus system. It is connected via the I-Port of any LCN module as of version 140719 (July 2010). The integrated temperature sensor allows the user to control the temperature.

design examples

Description

The four capacatively sensor surfaces are arranged behind a glass panel. A light touch of the surface is all that is required to initiate different functions. The intelligent control system distinguishes between Hit, Hold and Release so that three commands are possible for every key. The sensor surfaces can be digitally labelled on the display. Several different types of viewing options are possible on the display.

Symbol-Line:
A maximum of six symbols can be displayed on the top-line of the screen. These symbols must be assigned to a binary input, relay, output or a logic-function and react to their status messages.

Text-Line:
When using font size 20, every one of the four text lines can have a maximum of 63 characters displayed, of which 19 -23 characters are visible (auto scroll function). The text lines 1 to 3 can be adjusted to double the line height (font size 40) and occupy two lines.

Key labelling:
A text for labelling the four keys can be displayed. The text can be a maximum of 25 characters long (without auto scroll). Alternatively, the display can show four lines of text if labelling the keys is not necessary.The LCN-GT(S)4D uses eight languages which can be adjusted during operation: German, English, French, Spanish, Polish, Turkish, Russian and Arabic.

Application fields

The LCN-GT(S)4D is for mounting in interior dry rooms. It can be used for every switch, regulator and operational task within the LCN bus system. It is especially suited to the design orientated user who demands high performance and comfort.

Scope of delivery

- LCN-GT(S)4D in black or white, other colours available on demand
- Mounting plate with adapter for connecting
- LCN-NUI power supply unit
- Installation guide

Note:
Attention: Connect without power! During installation, the sensor´s electronics can be destroyed by the lighting power supply if the cable comes in contact with the wrong terminal. The operation of further I-Port peripheries with bidirectional communications (e.g. LCN-ULT or IOS-MC55) is not permitted!

Function:

The sensor surfaces of the LCN-GT(S)4D react capacitively to the glass front being touched. According to how long the glass panel is touched, a corresponding LCN command Short, Hold, Release is sent. The command is sent via the adapter to the I-Port of an LCN module. The sensor surfaces can be labelled on the digital display. The display shows a maximum of six status dependent symbols on the top symbol-line. In the lower text-lines, any desired text can be shown and represented either dependently or independently of status. The integrated temperature sensor allows the user to control the temperature.

A special feature of the LCN-GT(S)4D is its built-in 24 channel timer switch with a total of 96 switching moments. The 24 channels can be readily labelled so that any changes in switching moments can also be made by end consumers. The time switching functions make it easy for programming when it comes to local bank holidays and other holidays or to entering one's own personal holiday calendar. Programming of time and calendar functions as well as the entering personal texts is achieved with the LCN-PRO. Individual times, bank holidays and other holidays can be modified either in the LCN-GT(S)4D or the LCN-PRO as desired.

Models:

LCN-GT4D
Size: 90 x 90 mm

Colour:	white	LCN-GT4DW
	black	LCN-GT4DB
	champagne	LCN-GT4DC

LCN-GTS4D
Size: 75 x 75 mm

Colour:	white	LCN-GT4DW
	black	LCN-GT4DB
	champagne	LCN-GT4DC

LCN-GT4D | LCN-GTS4D

Information keypad with 2.8'' graphic display and four capacitive keys

- **Four capacitive sensor surfaces behind glass**
- **TFT coloured display with 71mm diagonal (2,8“)**
- **Display to visualize all functions**
- **Including white Corona surrounding light**
- **Including integrated temperature sensor**
- **Including 24 channel timer switch**
- **For operating on the I-Port**

Technical data

Connection

Power supply:	via LCN module + external supply unit LCN-NUI
LCN-Connection:	I-Port (from version 140719)

Keys:

Type:	4 keypads for digital labelling with the LCN-PRO software
Function:	Short, Hold, Release

LED´s:

Corona® LEDs:	white Corona® light for decorative accent lighting

Display:

Type:	TFT Colour display
Size:	2.8”, 320 x 240 pixels
Display:	1 line for max. 6 symbols 4 lines for text up to 63 characters
Colours:	65.356 colours

Temperature sensor:

Measurement range:	-10 to 40 °C
Resolution:	0.1 °C
Accuracy:	0.3 °C from 15 to 30 °C

General details:

Operating temperature:	-10 to 40 °C
Humidity:	max. 80% rel., non condensing
Environmental conditions:	Stationary installation according to VDE 632, VDE 637
Degree of protection:	IP 20

Dimensions:

LCN-GT4D (H x W x D):	90 x 90 x 13 mm (4 mm glass thickness)
LCN-GTS4D: (bevelled edges)	75 x 75 x 11 mm (3 mm glass thickness)
Assembly:	With mounting plate for a flush mounted wall-box.
Frame:	Available in white, black and champagne, special customized colours on request.

LCN-GT4D

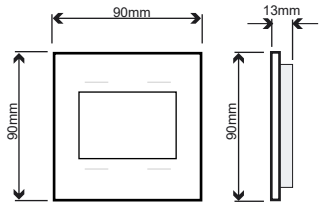

LCN-GTS4D

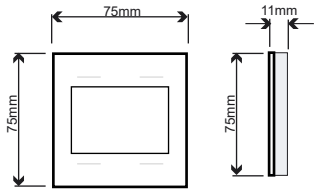

Circuit diagram

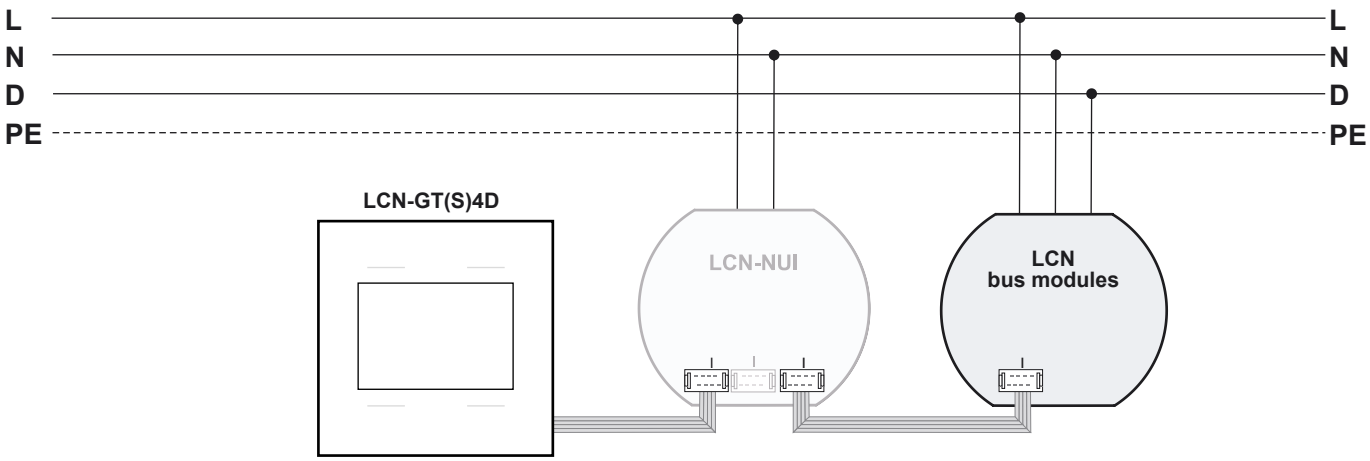

LCN-GT10D | LCN-GTS10D

Glass Touch-Keypad with 6 + 4 keys and 2.8“ graphic display

The LCN-GT(S)10D is an information keypad with TFT display. It is intended for installation on two flush-mounted boxes or one double box and can be fixed firmly to the wall by means of a special mounting plate. It is connected via the I-Port of any LCN module of version 140601 or higher (June 2010). The integrated temperature sensor allows the user to control the temperature.

Description

The capacitive sensor surfaces are positioned behind a glass panel. Slight contact with the surface is sufficient to trigger various functions. The intelligent control system distinguishes between tapping, prolonged contact and releasing of the keys, with the result that three commands are possible per key. Six integrated LEDs in the six lower sensor surfaces provide information about the current status of any actuators or sensors in the building. The individual labelling of the sensor surfaces can be transferred to paper/film and placed behind the glass panel. This labelling can be replaced at any time, which means changes to the key assignment are no problem. The four upper sensor surfaces on the display can be labelled digitally by means of the LCN-PRO. Several different types of viewing options are possible on the display.

Symbol-Line:
A maximum of six symbols can be displayed on the top-line of the screen. These symbols must be assigned to a binary input, relay, output or a logic-function and react to their status messages.

Text-Line:
When using font size 20, every one of the four text lines can have a max. of 63 characters entered, of which 19 -23 characters are visible (auto scroll function). The text lines 1 - 3 can be adjusted to double the line height (font size 40) and occupy two lines.

Key labelling:
A text for labelling the four keys can be displayed. The text can be a maximum of 25 characters long (without auto scroll). Alternatively, the display can show four lines of text if labelling the keys is not necessary.

The LCN-GT(S)10D uses eight languages which can be adjusted during operation: German, English, French, Spanish, Polish, Turkish, Russian and Arabic.

Application fields

The LCN-GT(S)10D is intended for installation in dry interior rooms. It can be used for all switching, regulation and control tasks in the LCN bus. It is particularly suitable for design-oriented users who place very high demands on functionality and convenience.

Scope of delivery

- LCN-GT10D | LCN-GTS10D
- Mounting plate with adapter for connecting
- LCN-NUI power supply unit
- Installation guide

Note:
Attention: Connect without power! During installation, the sensor´s electronics can be destroyed by the lighting power supply if the cable comes in contact with the wrong terminal. The operation of further I-Port peripheries with bidirectional communications (e.g. LCN-ULT or IOS-MC55) is not permitted!

Function:

The sensor surfaces of the LCN-GT(S)10D respond capacitively to contact with the glass surface. A corresponding LCN control command Short, Hold or Release is sent, depending on the contact duration. The control command is transmitted to the I-Port of an LCN module via the adapter included in the scope of delivery. The six status LED´s in the lower sensor surfaces are controlled separately via the I-Port and configured by the LCN-PRO as On, Off, Flashing or Flickering. A maximum of six symbols appear on the display, depending on the status. Any text can be displayed on the bottom text lines, either status-independently or status-dependently. The upper sensor surfaces can be labelled digitally on the display. The integrated temperature sensor allows the user to control the temperature.

The blue sensor backlighting (optional) allows the LCN-GT10D to be operated conveniently even without much ambient light. A particular highlight of the LCN-GTS10D is its built in 24-channel timer with a total of 96 switching times. The 24 channels can be labelled as desired, which means switching points can be changed even integrated temperature sensor. The convenient programming of timer functions directly in the LCN-GT10D or LCN-PRO allows local bank holidays and holidays to be entered, well as a personal holiday calendar.

Models:

LCN-GT10D
Size: 90 x 160 mm

Colour:	white	LCN-GT10DW
	black	LCN-GT10DB
	champagne	LCN-GT10DC

LCN-GTS10D
Size: 75 x 145 mm

Colour:	white	LCN-GTS10DW
	black	LCN-GTS10DB
	champagne	LCN-GTS10DC

LCN-GT10D | LCN-GTS10D

Glass Touch-Keypad with 6 + 4 keys and 2.8“ graphic display

- **6+4 capacitive sensor surfaces behind glass**
- **Six status LED´s**
- **TFT coloured display with 71mm diagonal (2,8“)**
- **Display to visualize all functions**
- **Including white Corona surrounding light**
- **Including integrated temperature sensor**
- **Including 24 channel timer switch**
- **For operating on the I-Port**

Dimensions:

LCN-GT10D (W x H x D):	90 x 160 x 13 mm (4 mm glass thickness)
LCN-GTS10D: (bevelled edges)	75 x 145 x 11 mm (3 mm glass thickness)
Assembly:	With mounting plate for a flush mounted wall-box.
Frame:	Available in white, black and champagne, special customized colours on request.

LCN-GT10D

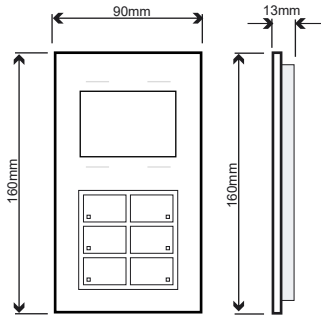

LCN-GTS10D

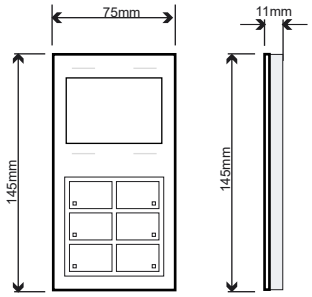

Technical data

Connection

Power supply:	via LCN module + external supply unit LCN-NUI
LCN-Connection:	I-Port (from version 140719)

Keys:

Type:	6+4 capacitive sensors with 6 status LEDs behind glass
Function:	Short, Hold, Release
Labelling:	Labelling membrane/foil

LEDs:

Status-LED´s:	6 LEDs, command controlled
Function:	On/Off/Flashing/Flickering
Background illumination:	6 blue LEDs
Corona® LEDs:	white Corona® light for decorative accent lighting

Display:

Type:	TFT Colour display
Size	2.8” (71 mm), 320 x 240 Pixel
Display:	1 line for max. 6 symbols, 3 lines for text up to 63 characters, alternatively also 4 lines for text without key labelling

Temperature sensor:

Measurement range:	-10 to +40 °C
Resolution:	0.1 °C
Accuracy:	0.3 °C from 15 to 30 °C

General details:

Operating temperature:	-10 to +40 °C
Humidity:	max. 80% rel., non condensing
Installation:	Stationary installation according to VDE 632, VDE 637
Degree of protection:	IP 20

Circuit diagram

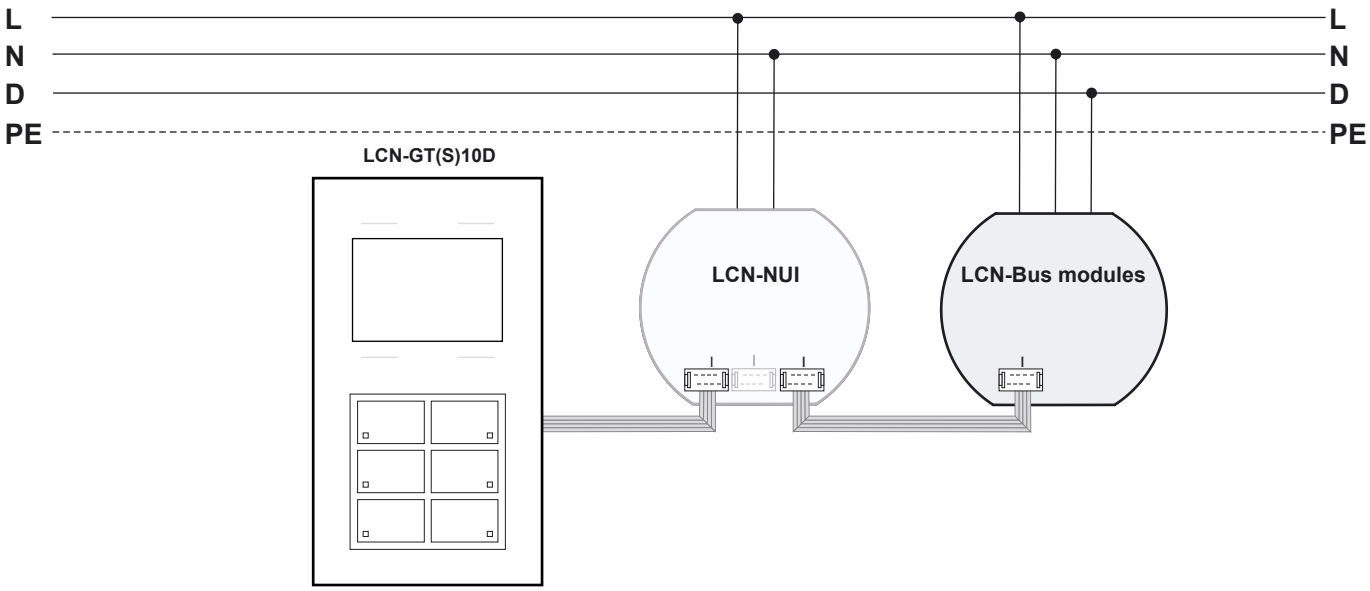

LCN-MT4

Four key sensor for 55 mm central inserts

The LCN-MT4 is a mechanical button with four keys. It can be used with LCN-modules as from version 17070A (July 2013) or higher. Having an integrated IR receiver the LCN-MT4 can process the signal of LCN remote controls. Additionally, the four keys have an integrated status LED and an extensive backlight.

A Corona® surrounding light with white LEDs serves as a subtle orientation light, if an LCN-G55 frame is used. This facilitates the use at a low ambient light level.

design examples

Description

The four key sensor initiates the keys C1 to C4 or C5 to C8. Depending on the duration of contact, a corresponding LCN-control-command Short, Hold or Release is transmitted. The four red key LEDs can be programmed individually as On, Off, Flashing or Flickering. The brightness can be set to different levels. Operating both the backlight and Corona® surrounding light, an external power supply is required (LCN-NUI, not included). An external power supply is also useful at normal daylight because it enhances the brightness of the status LEDs.

The individual letterings for the LCN-MT4 are printed on foil or paper and placed on the front. Printing new inlays is possible at any time. So that, changing the key layouts is no problem.

Application fields

The LCN-MT4 is for mounting in interior dry rooms. It can be used for every switch, regulator and operational task within the LCN bus system. It fits into common 55 mm frames. It is especially suited to the design orientated user who demands high performance and comfort. The operation of up to LCN-MT4 at the same time is not possible.

Scope of delivery

- LCN-MT4
- Suction cup for disassembly
- Mounting plate
- Printing foil
- Installation guide
- Mounting material

Models:

LCN-MT4
Size: 55 x 55 mm

Colour:	white	LCN-MT4W
	black	LCN-MT4B

Note:
Attention: Connect without power!

Switch off power supply LCN-NUI prior to installing the LCN-MT4. For more detailed information please refer to the installation instructions.

LCN-MT4

Four key sensor for 55 mm central inserts

- 4-way push-button
- Including infrared sensor
- Including background key light
- Individual designing for the key inlays
- For operating on the I-Port

Technical data

Connection:

Power supply:	Via the LCN-module, optional via LCN-NUI
LCN connection:	I-Port, length 230 mm, not extendable

Keys:

Type:	4 mechanical keys with status LEDs
Function:	Short, Hold, Release
Inlay:	exchangeable foil/paper

LEDs

Status-LEDs:	4 red LEDs to display LCN-status messages
Function:	On/Off/Flashing/Flickering
Background illumination:	LED´s

General details:

Operating temperature:	-10 to +40 °C
Humidity:	max. 80% rel., non condensing
Environmental conditions:	Stationary installation according to VDE 632, VDE 637
Degree of protection:	IP 20

Dimensions:

LCN-MT4 (H x W x D):	55 x 55 x 15 mm
Assembly:	mounted as central insert

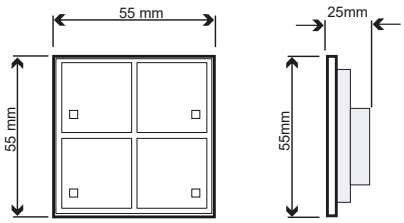

Circuit diagram

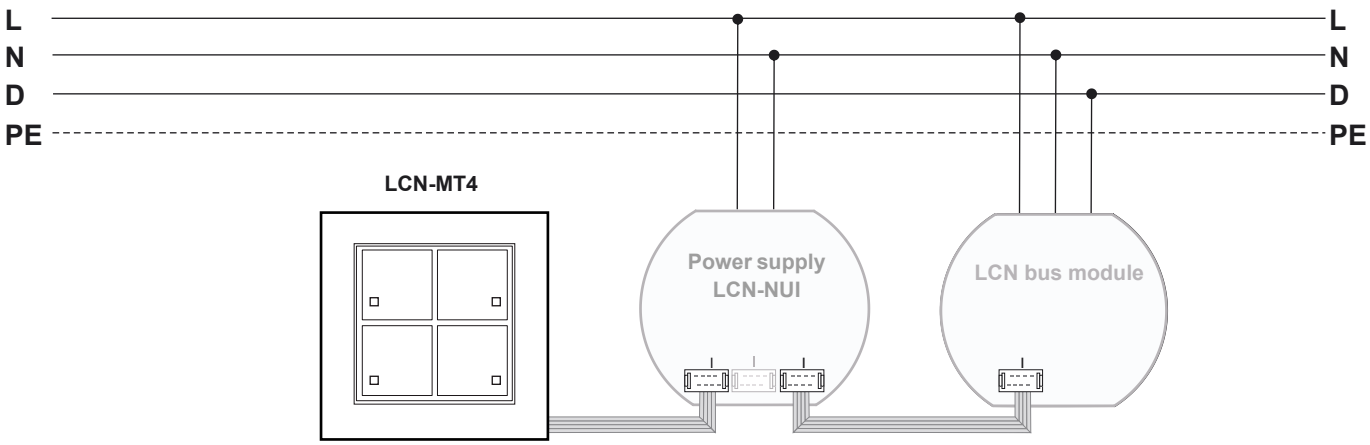

LCN-G55 | LCN-GS55

Glass frame for mounting System 55 mm

With the LCN-G55 and LCN-GS55 single frame, sockets can be installed on the LCN-GT (S) series. The glass frame has a thickness of 5/3 mm .

design examples

Description

The frame is suitable for all central inserts with the dimensions 55 x 55 mm (System 55/Standard 55). It is ideal for design-oriented users with highest demands on function and comfort .

Scope of delivery

- LCN-G55/LCN-GS55
- Installation instructions

Dimensions:

LCN-G55 (W x H x D):	90 x 90 x 11,7 mm (4 mm glass thickness)
LCN-GS55	75 x 75 x 10.5 mm (bevelled edges)
Assembly:	The frame is fixed by the outlet or switch/button on the mounting plate or flush mounted wall box.

Models:

LCN-G55
Size: 90 x 90 mm

Colour:	white	LCN-G55W
	black	LCN-G55B
	champagne	LCN-G55C

LCN-GS55
Size: 75 x 75 mm

Farbe:	white	LCN-GS55W
	black	LCN-GS55B
	champagne	LCN-GS55C

Note:
Please read the installation guide for further information.

LCN-G55-2 | LCN-GS55-2

Double glass frame for mounting System 55 mm

With the LCN-G55-2 or LCN-GS55-2 double frame, sockets can be installed on the LCN-GT (S) series fit . The glass frame has a thickness of 5/3 mm .

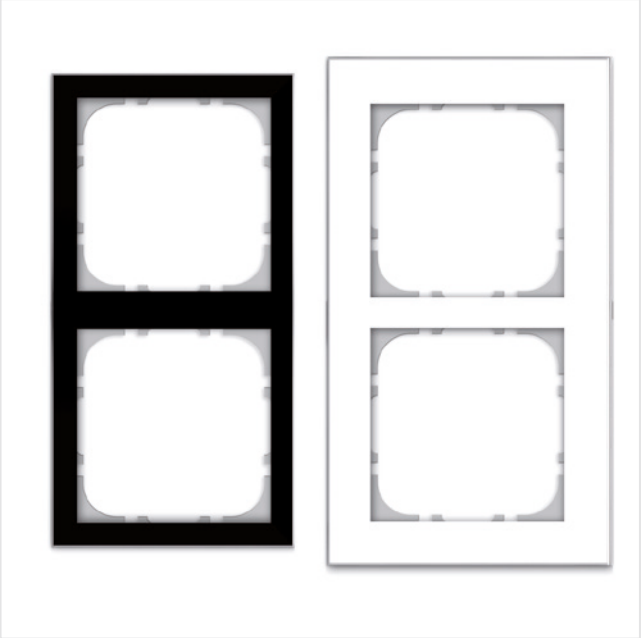

Description

The frame is suitable for all central inserts with the dimensions 55 x 55 mm (System 55/Standard 55). It is ideal for design-oriented users with highest demands on function and comfort .

Scope of delivery

- LCN-G55-2/LCN-GS55-2
- Installation guide

Dimensions:

LCN-G55-2 (W x H x D):	90 x 90 x 11,7 mm (4 mm glass thickness)
LCN-GS55-2	75 x 75 x 10.5 mm (bevelled edges)
Assembly:	The frame is fixed by the outlet or switch/button on the mounting plate or flush mounted wall box.

Models:

LCN-G55-2
Size: 90 x 160 mm

Colour:	white	LCN-G55-2W
	black	LCN-G55-2B
	champagne	LCN-G55-2C

LCN-GS55
Size: 75mm x 148mm

Colour:	white	LCN-GS55-2W
	black	LCN-GS55-2B
	champagne	LCN-GS55-2C

Note:

Please read the installation guide for further information.

LCN-GG1

Gesture controlled switch including Corona® backlight

The LCN-GG1 is a sensor that triggers actions in the LCN bus without being touched. Switching actions are triggered with a swipe gesture up or down. In addition, a group of lights can be dimmed with a rotating gesture by a circling index finger. A total of 6 of these combinations can be selected by the user swiping horizontally to the left or right. The LCN-GG1 is connected to LCN bus modules from version 1E0706 (July 2020). The LCN-PRO from Ver. 6.8.6 is required for setup.

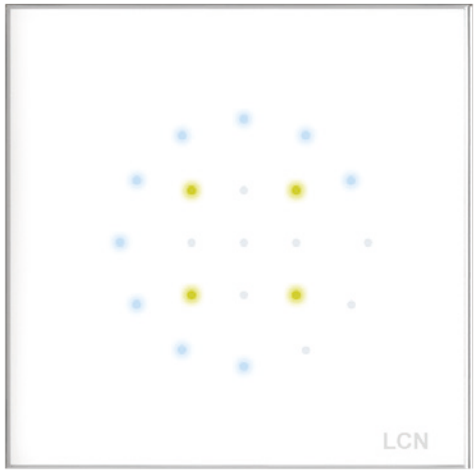

design examples

Description

With the LCN-GG1, outputs can be controlled and keys triggered by gestures, i.e. only by hand movements in front of the pushbutton. The pushbutton is not touched!

Up to 6 gestures can be selected by wiping sideways in front of the pushbutton. The number of the gesture is displayed in the form of the eyes of a cube in the middle.

Each gesture can control one or a combination of outputs and trigger the long and loose command of a key from the C table. Swiping up or down triggers the long (swipe up) or loose command (swipe down) of the corresponding C key.

By circling with a finger in the area of the cube, the light can be adjusted brighter (clockwise) or darker (counterclockwise). The outer circle indicates the current brightness.

Up to 2 GG1 pushbuttons can be operated on one module, so that a total of 12 gestures are possible.

Models:

LCN-GG1
Size: 110 x 110 mm

Colour:	white	LCN-GG1W
	black	LCN-GG1B

Application fields

The LCN-GG1 is intended for installation in dry indoor spaces. With the enclosed adapter, it is supplied with voltage and connected to an I-connector. A Corona® light ring with white LEDs is used for decorative wall illumination and as a discreet orientation light, so that the LCN-GG1 can be operated comfortably even in low ambient light.

Scope of delivery

- LCN-GG1, power supply unit
- I- connecting cable, mounting frame
- Installation instructions

Note:
Attention: Connect without power! During installation, the sensor´s electronics can be destroyed by the lighting power supply if the cable comes in contact with the wrong terminal. The operation of further I-Port peripheries with bidirectional communications (e.g. LCN-ULT or IOS-MC55) is not permitted!

LCN-GG1

Gesture controlled switch including Corona® backlight

- **6+4 capacitive sensor surfaces behind glass**
- **Six status LED´s**
- **TFT coloured display with 71mm diagonal (2,8“)**
- **Display to visualize all functions**
- **Including white Corona surrounding light**
- **Including integrated temperature sensor**
- **Including 24 channel timer switch**
- **For operating on the I-Port**

Technical data

Connection

Power supply:	via LCN module + external supply unit
LCN-Connection:	I-Port

Function

Sensor:	Gesture sensor for touchless operation
LEDs:	Cube display for the current gesture, circular ring for brighn ess
Corona® LEDs:	white Corona® light for decorative accent lighting

Temperature sensor:

Measurement range:	-10 to +40 °C
Resolution:	0.1 °C
Accuracy:	0.3 °C from 15 to 30 °C

General details:

Operating temperature:	-10 to +40 °C
Humidity:	max. 80% rel., non condensing
Installation:	Stationary installation according to VDE 632, VDE 637
Degree of protection:	IP 20

Dimensions:

LCN-GG1 (H x W x D):	110 x 110 x 14 mm
Assembly:	With mounting plate for a flush mounted wall-box.
Frame:	Available in white and black special customized colours on request.
Power supply (Ø x H):	50 x 22mm

LCN-GG1

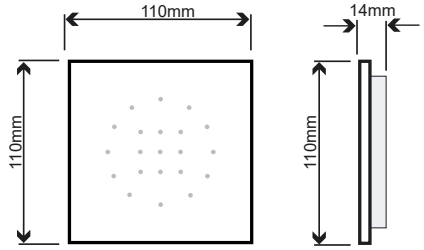

Circuit diagram

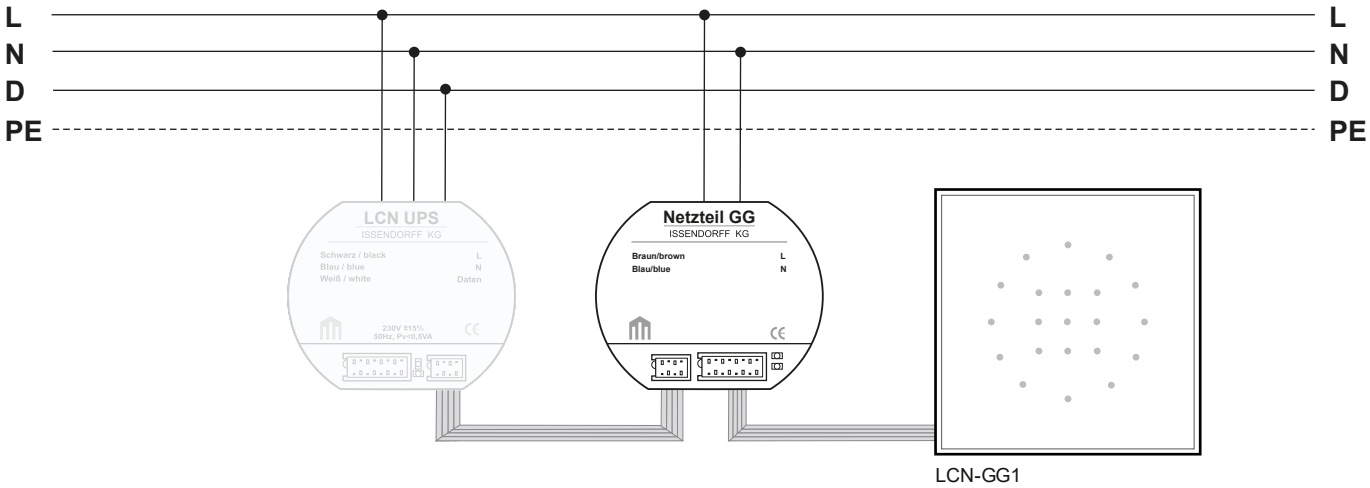

LCN | Inputs

LCN-T4I

Cable set with acoustic signalling for potential-free push buttons

The LCN-T4I as LCN connection cable set allows the connection of up to four conventional potential-free push-buttons via the I-Port of the flush mounted bus modules LCN-UPP, LCN-UPS, LCN-UPU, LCN-UMR or LCN-UMR24. A maximum of two LCN-T4I can be connected to one LCN bus module, so that a maximum of eight keys can be queried. The signal types Short, Hold and Release are recognized. An acoustic signal transmitter on the circuit board is used to indicate system states.

Application

The LCN-T4I is a cable connection set that connects up to four potential-free push-buttons in a flush-mounted box to an LCN bus module. The first LCN-T4I acts on the A table, keys 1 to 4, the second on the A table, keys 5 to 8.

Hardware

- Cable with plug for I-Port
- Connection leads for push-buttons with ferrules
- Acoustic signal transmitter

Note:
The length of the cables between a push-button and the LCN-T4I must not exceed a maximum length of three meters. The LCN-BT4R is available for longer connections.

LCN-T4I

Cable set with acoustic signalling for potential-free push buttons

- **Adapter cable set for a maximum of 4 push-buttons**
- **Acoustical signalling**
- **For operating on the I-Port**

Technical Data

Connection:

Wire type:	Strand wires 0.75 mm² with insulated ferrules
I-connecting lead:	250 mm

Inputs:

Connection length:	Max. 3 m per input (for longer connections, use the LCN-BTR)

General details:

Operating temperature:	-10 bis 40 °C
Humidity:	max. 80% rel., non condensing
Environmental conditions:	stationary installation according to VDE 632,VDE 637
Degree of protection:	IP 20, when installed in deep flush-mounted box

Dimensions:

LCN-T4I (L x W x D):	17 x 23 x 12 mm
Connection wires:	250 mm
Assembly:	decentralized installation in deep flush-mounted box with the LCN-UPP, LCN-UPS, LCN-UPU, LCN-UMR, LCN-UMR24

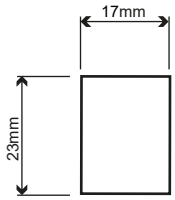

Curcuit diagram

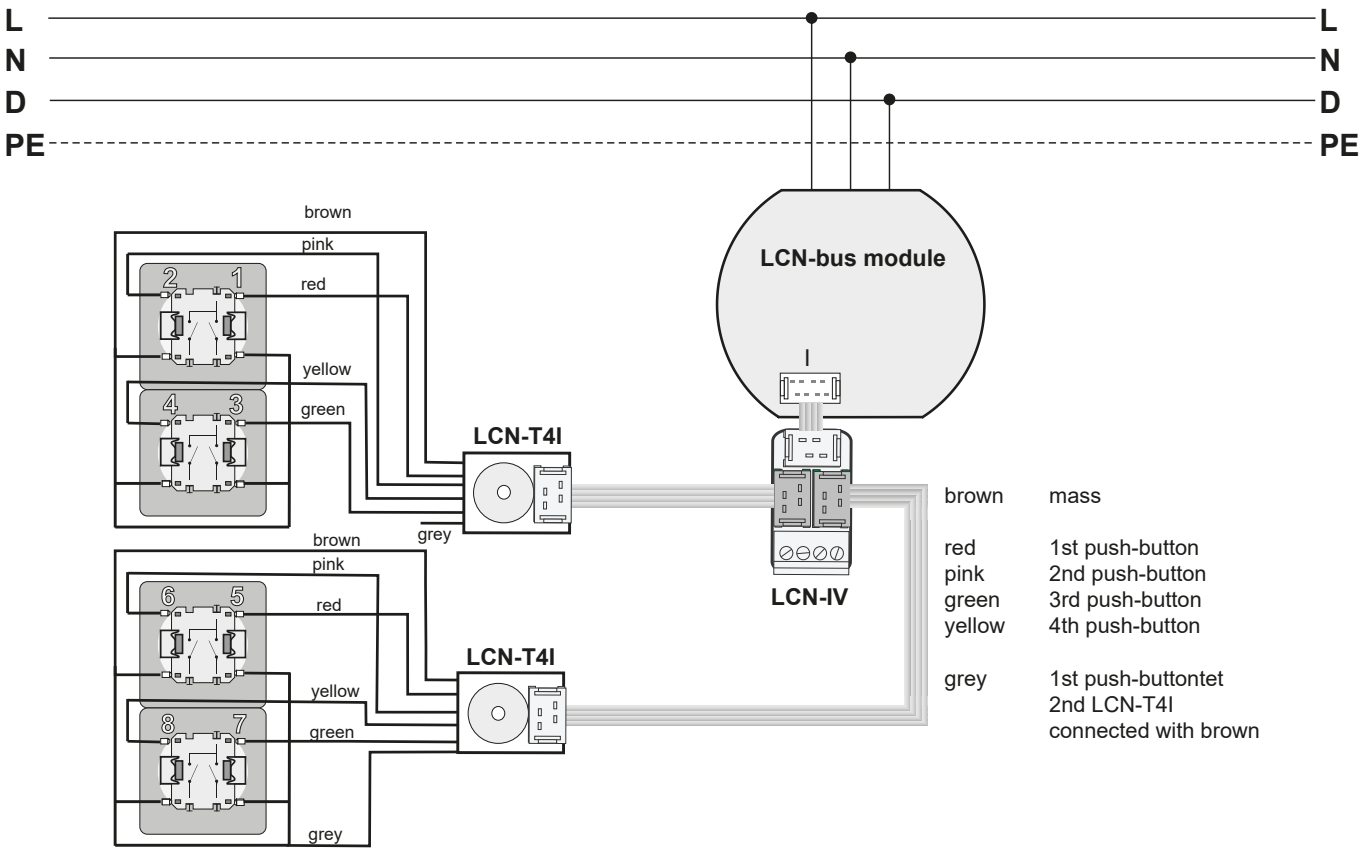

LCN-T8

Converter for eight conventional keys with acoustic signalling

The LCN-T8 is an LCN cable set with an acoustic signal transmitter for conventional potential-free push-buttons. It is suited for use with the LCN-UPP, LCN-UPS module; it also can be used with the LCN-HU, LCN-UMR LCN-SHU, LCN-SHD LCN-SH and LCN-LD. Each key connection distinguishes between the Short, Hold and Release functions.

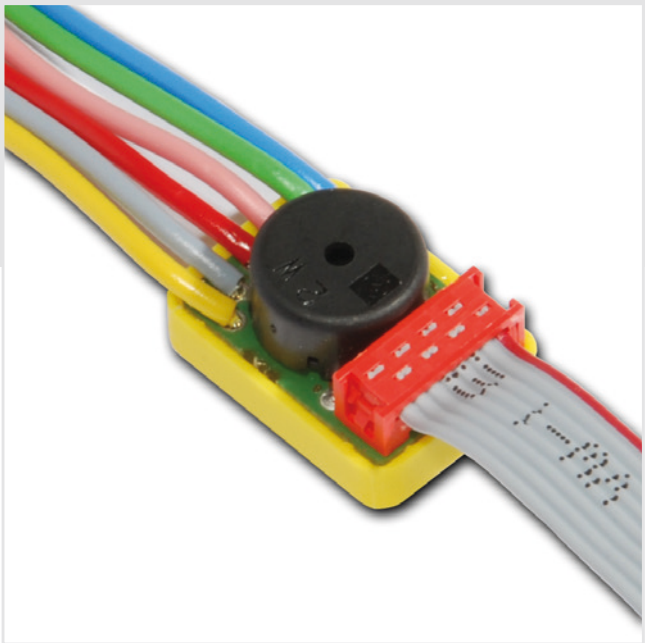

Application

The LCN-T8 is a connection cable for a max. of 8 UP push-buttons for simple wiring in a flush mounted wall box. It can also be used for two ‚multi-switches' (with 4 single contacts).

Hardware

- Cable with plug for T-Port connection
- Strand wire connection with insulated ferrules for the push-buttons
- Acoustic signal device

Note:
The connecting wires between a push-buttons and the LCN-T8 must not exceed the maximum length of 0.5 m. For longer connections the LCN-BT4R is available. Not suitable for permanent contacts like switches, binary sensors etc.

LCN-T8

Converter for eight conventional keys with acoustic signalling

- **Adapter cable set for a maximum of 8 push-buttons**
- **acoustical signalling**

Technical Data

Connection:

Wire type:	Strand wires 0.75 mm², with insulated ferrules

Inputs:

Connection length:	max. 50 cm each input

General details:

Operating temperature:	-10 to 40 °C
Humidity:	max. 80% rel., non condensing
Environmental conditions:	stationary installation according to VDE 632,VDE 637
Degree of protection:	IP 20, when installed in a deep flush-mounted box

Dimensions:

LCN-T8 (L x W x D):	17 x 23 x 12 mm
Connection wires:	160 mm
Assembly:	decentralized installation in a deep flush-mounted box with an LCN-UPP, LCN-UPS, LCN-UPU, LCN-UMR or LCN-UMR24

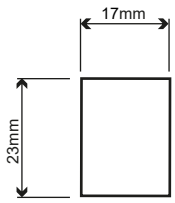

Circuit diagram

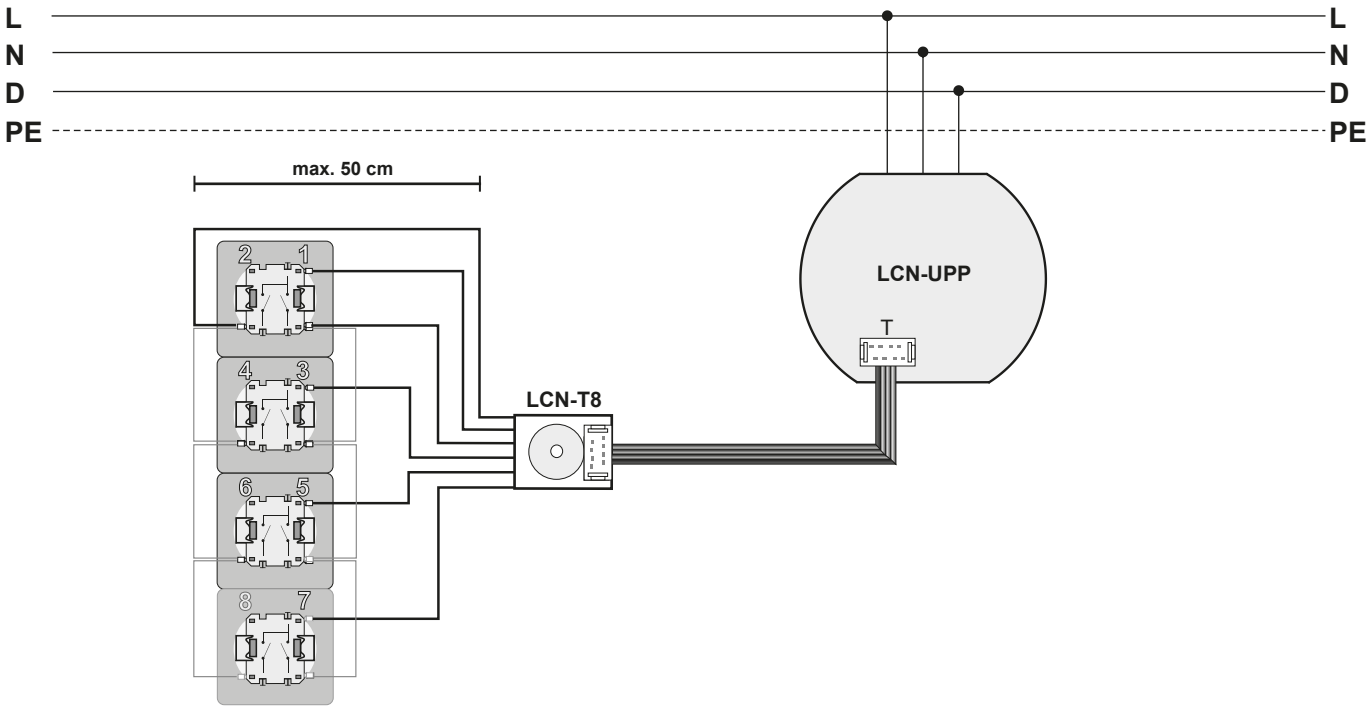

LCN-TEU

Universal converter for KNX standard key sensors

The LCN-TEU is an adapter cable for the operation of KNX quadrupal key sensors on the T-Port connection of LCN modules. It can also be used in conjunction with the LCN-TE1 or LCN-TE2 when another KNX key converter is to be connected. It has a connection for the voltage supply for background-lit key converters. The LCN-TEU is designed to be used with the LCN-UPP, LCN-UPS or LCN-UPU modules. Each key connection distinguishes between the Short, Hold and Release functions.

Description

The LCN-TEU is a connection cable for KNX quadruple key sensors. It supports up to eight keys and five LED circuits.

Hardware

- Cable with plug for T-Port connection
- Socket for T-Port connector from the LCN-TEU
- Miniature connection screws for optional supply
- Acoustic signal device

Note:
When using single and double key converters from Berker, Gira, Jung, Legrand and Peha please use the LCN-TE2. Universal key sensors with special functions are not supported. The 24 Volt feed is only used with background-lit key converters or in special cases. For detailed information please refer to the installation guide manual.

LCN-TEU

Universal converter for KNX-standard key sensors

- **Mounting adapter for 4-way push-button sensors**
- **Acoustical signalling**
- **For operating on the T-Port**

Technical Data

Key converter interfaces:
(operation without LCN-NU9)
Jung 2073+2074 NABS+TSM
Berker 7516 40 + 7516 41
Berker 7516 33 + 7516 43
Hager WYT32
Hager WYT34 (max. 6 LEDs)
Hager WYT36 (max. 6 LEDs)

Key converter interfaces:
(with LCN-NU9)
GIRA 1013
Berker 7516 30 B.IQ
Berker 7516 40 B.IQ
Hager WYT32
Hager WYT34
Hager WYT36
Busch-Jaeger 6125, 6126, 6127,

Connection:
Terminals: for screwing
Wire type: solid or strand wire max. 0.5 mm² or with insulated ferruls max. 0.5mm²

General details:
Operating temperature: -10 to 40 °C
Humidity: max. 80% rel., non condensing
Environmental conditions: staionary installation according to VDE 632,VDE 637
Degree of protection: IP 20

Dimensions:

LCN-TEU (HxWxD): 10 x 22 x 11 mm
Supply Cable: 160 mm

Assembly: decentralized installation in deep flush-mounted box

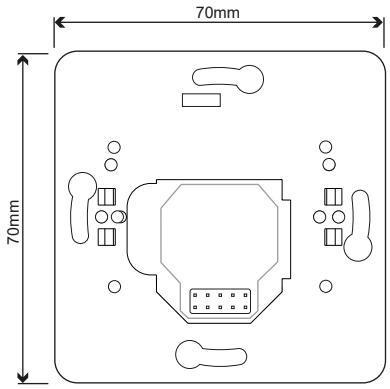

Circuit diagram

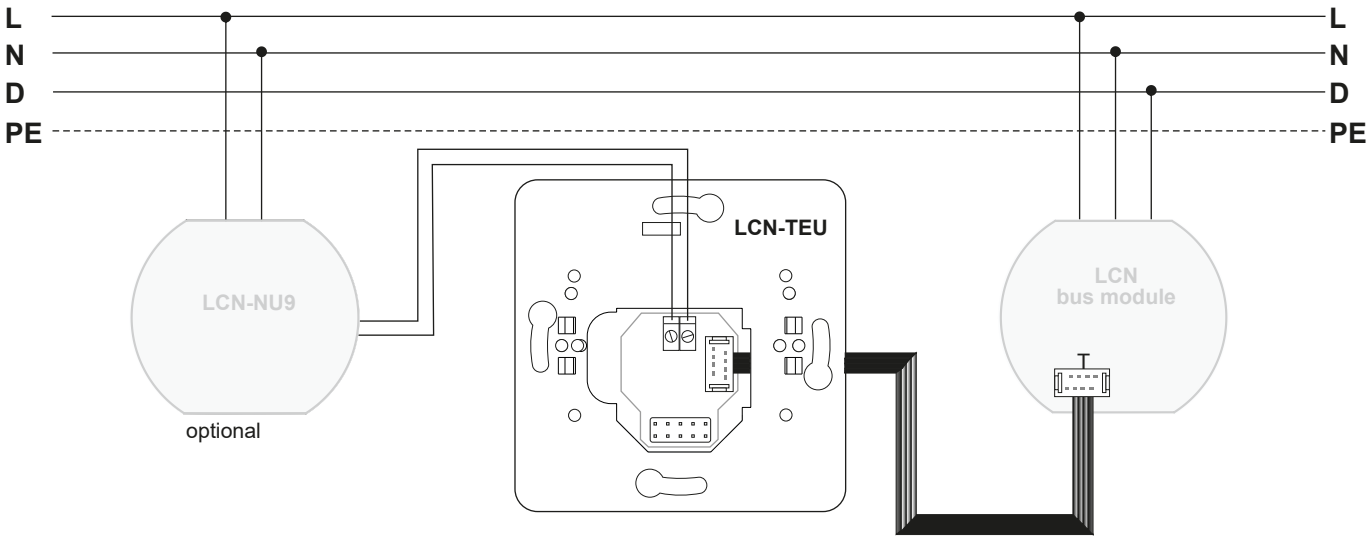

LCN-TE1

Universal converter for combined operation of single and triple/quadruple key sensors

The LCN-TE1 is an adapter cable for parallel operation of KNX triple/quadruple and single standard keys of the Insta Group. A special feature of the LCN-TE1 is the option of connecting one more single key converter by using the LCN-TEU. The LCN-TE1 is designed to be used with the LCN-UPP, LCN-UPS or LCN-UPU modules. Each key connection distinguishes between the Short, Hold and Release functions.

Description

Up to eight keys can be used. All five LED circuits are controlled. A built-in sound generator allows acoustic signalling.

Hardware

- Cable with plug for T-Port connection
- Socket for T-Port connector from the LCN-TEU
- Miniature connection screws for optional supply
- Acoustic signal device

Note:
The 24 Volt feed is only used with keys that have background lighting. Universal key sensors with special functions are not supported. For detailed information please refer to the installation guide.

LCN-TE1

Universal converter for combined operation of single and triple/quadruple key sensors

- **Mounting adapter for combining 1, 3- and 4-waypush-button sensors**
- **Acoustical signalling**
- **For operating on the T-Port**

Technical Data

Push button for combination LCN-TE1 and -TEU

Key converter interfaces

LCN-TE1	Berker 7516 40 + 7516 41 Berker 7516 33 + 7516 43 GIRA 1013

Key converter interfaces

LCN-TEU	Berker 7516 10+7516 11 Berker 75161 13 GIRA 881 GIRA 551 GIRA 1011

Note on operation of keys:
The Berker B.IQ and the series GIRA 1011 + 1012 can alternatively be used for background lighting with the LCN-NU16!

Connection:

Terminals:	for screwing
Wire type:	solid or strand wire max. 0.5 mm² or with insulated ferrules max. 0.5 mm²

General details:

Operating temperature:	-10 to 40 °C
Humidity:	max. 80% rel., non condensing
Environmental conditions:	stationary installation according to VDE 632,VDE 637
Degree of protection:	IP 20

Dimensions:

LCN-TE1 (H x W x D):	10 x 22 x 11 mm
Supply Cable:	160 mm
Assembly:	decentralized installation in deep flush-mounted box

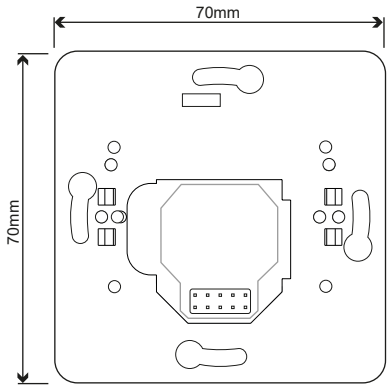

Circuit diagram

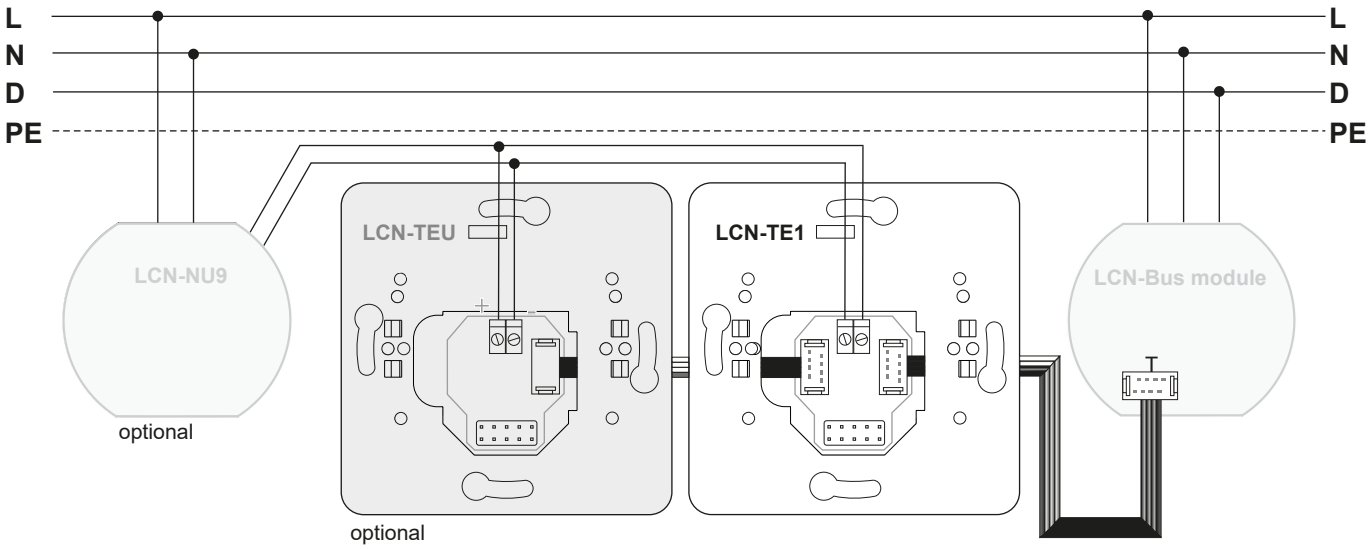

LCN-BT4H

Push-button converter or quadruple binary input for I-Port

The LCN-BT4H is either used as quadruple binary sensor or as key signal converter for mains voltage (230 VAC) for all LCN-modules from version 140719 (July 2010). The four inputs of the LCN-BT4H evaluate any phase position signals against N.

Description

In its role as key converter, conventional buttons can be evaluated. As a binary sensor, can for example timer or window contacts (occupancy sensors) be evaluated. The inputs are galvanically isolated from the I-port. In its function as key converter the commands short, long and release are triggered in the A-table, in its function as binary sensor the commands long and release are triggered in the B-table. By DIP-switch the LCN-BT4H can be switched from key converter to binary sensor.

Hardware

- Four binary inputs
- DIP switch
- I-Port
- Ribbon cable with I-Port connector
- Four status LEDs

Note:
The ribbon cable is a signal cable. It is to be layed separated from mains cable and power conductor:-is not to be bind to a 230 Volt cable harness! For detailed information please refer to the installation guide.

Field of application:

Can be used for all modules produced

since 2010 (firmware 140 714). The LCN-BT4H is detected automatically.

Function as key converter:
The sensors can be operated simultaneously with any I-port periphery, but not more than 5 I-peripheral devices on one I-port.

Important:
The following old periphery should not be connected at the same time: LCN TU4x, -T8 & -TEx!

Function as binary sensor:
The following sensors can be used at once: LCN-TS, -GRT, GT4D, GT10D,-GT2, -GT6L, -ULT, and -RR. Again, not more than 5 peripheral devices on one I-port.

Restriction:
In mode „binary sensor 5-8“ the modules LCN B3I (B6-B7) must not be operated; either one of LCN-GBL (B4, B5, B6, B7) or one of PMI (B4, B5, B6, B7) may be operated, otherwise the signals overwrite each other.

Restriction:
In mode „binary sensor 1-4“ the modules LCN B3I (B6-B7) may be operated without any restrictions, LCN-GBL (B4, B5, B6, B7) or PMI (B4, B5, B6, B7) are limited to a maximum of three, otherwise the signals overwrite each other.

Important:
The following periphery MUST NOT be connected: -B8H & B8L!

LCN-BT4H

Push button converter or quadruple binary input for I-Port

- **Use as key-converter for conventional push-buttons**
- **Use as binary senor for timer switches or other preferred permanent contacts**
- **For operating on the I-Port**

Technical data

Connection

Power supply:	none
Terminals/Conductor:	screwless, solid max. 2.5 mm² wire and ferrules max 1.5 mm², electric current: max. 16 A

Function

Ports/Key function:	4, Short, Hold, Release (with 4 control LEDs) As key converter : Table A, Key 1-4 or 5-8 As binary sensor: Table B, Key 1-4 or 5-8
High level:	> 120 VAC
Low level:	< 80 VAC
Sensing current:	< 7 mA
Debounce time:	25 ms (key converter), 100 ms (binary sensor)
LCN-connection:	I-Port lenght 300 mm (with plug),via LCN-IVH extendable to max. 50 m.
Cable lenght (ports):	max. 100 meter for each port

General details:

Operating temperature:	-10 to 40 °C
Humidity:	max. 80% rel., non condensing
Environmental conditions:	stationary installation according to VDE632, VDE637
Degree of protection:	IP 20

Dimensions:

LCN-BT4H (H x W x D):	37 x 92 x 66,5 mm 61,5 mm via DIN rail
Space requirement:	2 DU
Installation:	on 35 mm mounting rail (DIN 50022)

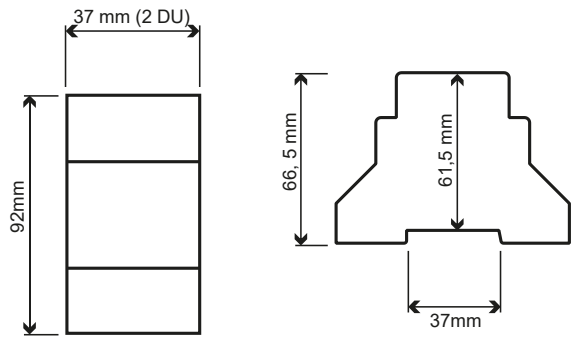

Circuit diagram

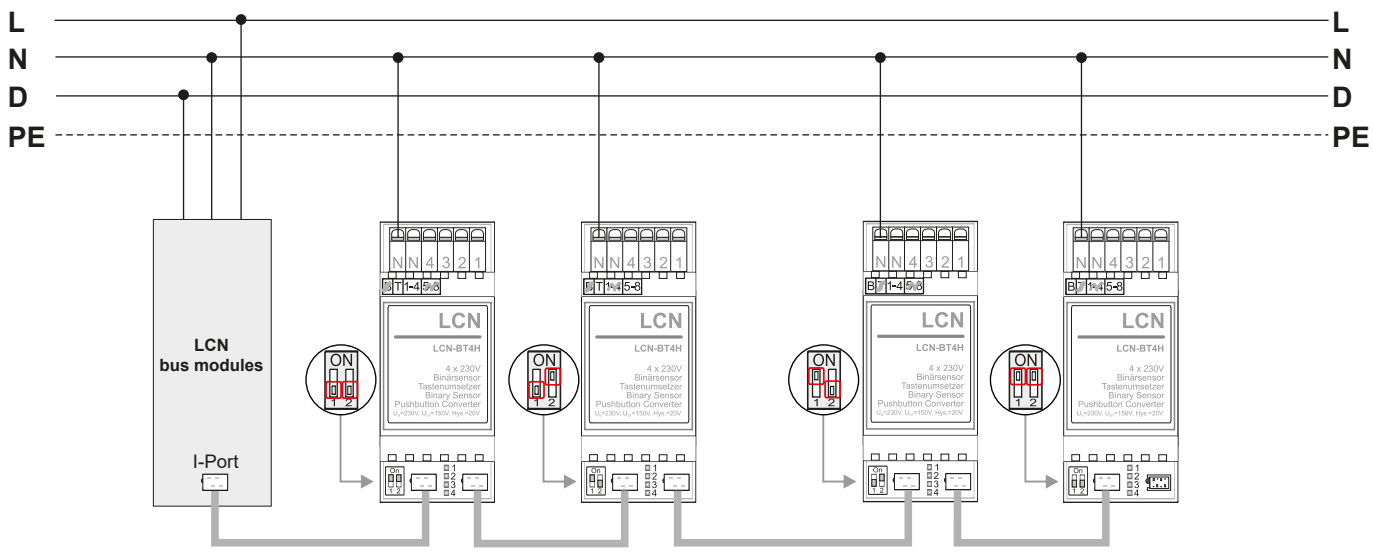

... as push-button converter ... as binary input

LCN-BT4R

Push-button converter or binary input 4 x 230 Volt for flush-mounting

LCN-BT4R is either used as a four-way binary sensor or key signal converter for mains voltage (230 VAC) for all LCN modules from version 140719 (July 2010). The four inputs of the LCN-BT4R evaluate any phase position signals against N.

Description

In its role as key converter, conventional buttons can be evaluated. As a binary sensor, can for example timer or window contacts (occupancy sensors) be evaluated.

The inputs are galvanically isolated from the I-Port. In its function as key converter the commands Short, Hold and Release are triggered in the A table, in its function as binary sensor the commands long and release are triggered in the B table.

Hardware

- Four binary inputs
- DIP switch
- I-Port
- Four status LEDs

Note:
The ribbon cable is a signal cable. It is to lead separated from mains cable and power conductor:-is not to be bind to 230 Volt cable harness! For detailed information please refer to the installation guide.

Application fields

Can be used for all modules produced since 2010 (firmware 140 714). The LCN-BT4R is detected automatically.

Function as key converter:
The sensors can be operated simultaneously with any I-Port periphery, but not more than five I-Port peripheral devices on one I-Port.

Important:
The following old periphery should not be connected at the same time: LCN TU4x, -T8 and -TEx!

Function as binary sensor:
The following sensors can be used at once: LCN-TS, -GRT, GT4D, GT10D,-GT2, -GT6L, -ULT and -RR. Again, not more than fiveperipheral devices on one I-port.

Restriction: I
In mode „binary sensor 5-8“ the modules LCN B3I (B6-B7) must not be operated; either one of LCN-GBL (B4, B5, B6, B7) or one of PMI (B4, B5, B6, B7) may be operated, otherwise the signals overwrite each other.

Restriction:
In mode „binary sensor 1-4“ the modules LCN B3I (B6-B7) may be operated without any restrictions, LCN-GBL (B4, B5, B6, B7) or PMI (B4, B5, B6, B7) are limited to a maximum of three, otherwise the signals overwrite each other.

Important:
The following periphery MUST NOT be connected: LCN-B8H and B8L!

LCN-BT4R

Push button converter or binary input 4 x 230 Volt for flush-mounting

- **Use as key-converter for conventional push-buttons**
- **Use as binary senor for timer switches or other preferred permanent contacts**
- **For operating on the I-Port**

Technical data

Connection

Power supply:	none
Terminals/Conductor:	screwless, solid wire max. 2.5 mm² and ferrules max 1.5 mm²,

Function

Ports/Key function:	4, Short, Hold, Release (with 4 control LEDs) As key converter : Table A, Key 1-4 or 5-8 As binary sensor: Table B, Key 1-4 or 5-8
High level:	> 120 VAC
Low level:	< 80 VAC
Sensing current:	< 7 mA
Debounce time:	25 ms (key converter), 100 ms (binary sensor)
LCN-connection:	I-Port length 300 mm (with plug),via LCN-IVH extendable to max. 50 m.
Cable length (ports):	max. 100 meter for each port

General details:

Operating temperature:	-10 to 40°C
Humidity:	max. 80% rel., no condensation
Environmental conditions:	stationary installation according to VDE632, VDE637
Degree of protection:	IP 20

Dimensions:

LCN-BT4R (Ø x H):	50 x 20 mm
Installation:	decentralized installation in deep flush-mounted box

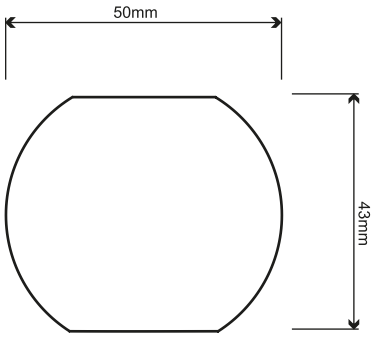

Circuit diagram

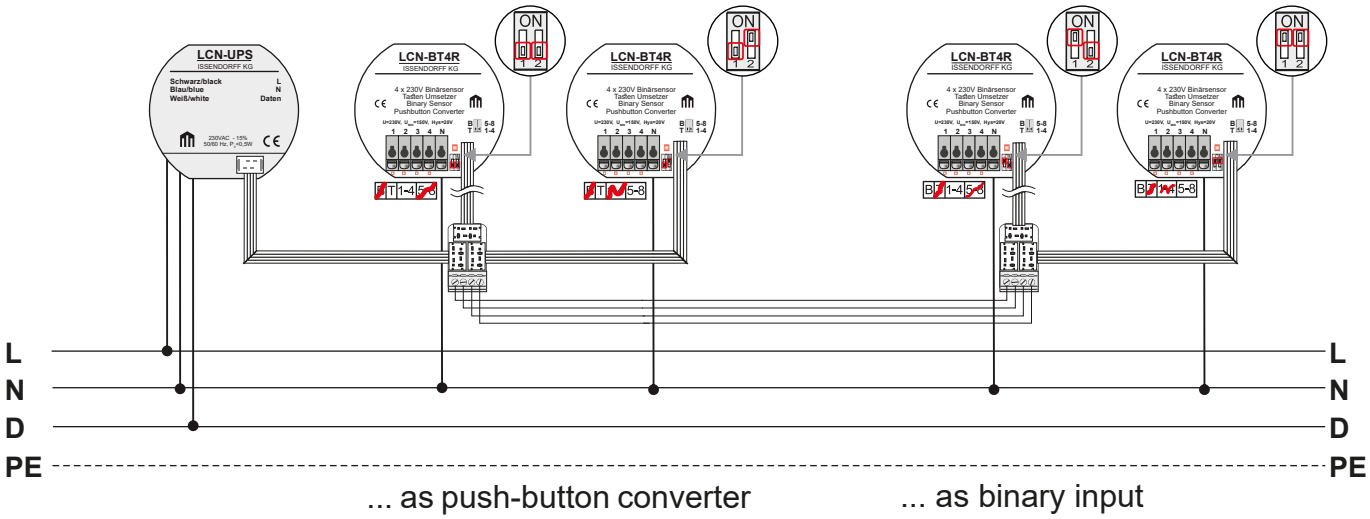

LCN-BU4L

Push-button converter or quadruple binary input 6 - 24 Volt

The LCN-BU4L is either used as a four-way binary sensor or key signal converter for floating contacts on low voltage with max. 24 Volt AC/DC for all LCN modules produced since July 2010 (version 140719).

Description

In its function as key converter, conventional switches can be evaluated. As binary sensor permanent contacts such as timer or window contacts can be evaluated. In its function as key converter the commands short, long and loose are triggered in the A table, in its function as binary sensor the commands long and release are triggered in the B-table. By a DIP switch the LCN-BT4R can be switched from key converter to binary sensor and vice versa.

The four inputs evaluate signals to ground, blue terminal. The inputs are galvanically isolated from the I-Port. In its function as key converter the commands short, long and release are triggered in the A table, in its function as binary sensor the commands Short and Hold are triggered in the B table.

Hardware equipment

- Four binary inputs
- DIP switch
- I-Port ribbon cable with I-Port connector
- Four status LEDs

Note:
The ribbon cable is a signal cable. It is be layed separated from mains cable and power conductor: is not to be bind to a 230 Volt cable harness! For detailed information please refer to the installation guide.

Application fields

Can be used for all modules produced since the year 2010 (firmware 140719). The LCN-BU4L is detected automatically.

Function as key converter:
The sensors can be operated simultaneously with any I-Port periphery, but not more than five I-Port peripheral devices at once at one I-port.Important: The following old periphery MUST NOT be connected at once: LCN TU4x, -T8 and -TEx!

Function as binary sensor:
The following sensors can be used at once: LCN-TS, -GRT, GT4D, GT10D, -GT2, -GT6L,-ULT, -UT and -RR. Again, not more than five peripheral devices at one I-Port.

Restriction:
In mode „binary sensor 5-8“ the modules LCN-B3I (B6-B7) must not be operated; either one of LCN-GBL (B4, B5, B6, B7) or one of LCN-PMI (B4, B5, B6, B7) may be operated, otherwise the signals overwrite each other.

Restriction:
In mode „binary sensor 1-4“ the modules LCN-B3I (B6-B7) may be operated without any restrictions, LCN-GBL (B4, B5, B6, B7) or -PMI (B4, B5, B6, B7) are limited to a maximum of three, otherwise the signals overwrite each other. Important: The following periphery MUST NOT be connected:LCN-B8H and -B8L!

The commands and status messages are only transmitted once during potential alteration. If the signals to the sensor are static, the module transmits neither message nor command. As an example: After a long period of voltage loss a panel transmits „Repeated binary sensor status message“ to retrieve „its“ binary sensors‘ status.

LCN-BU4L

Push-button converter or quadruple binary input 6 - 24 Volt

- **Key-converter for conventional push-buttons**
- **Binary senor for permanent contacts**
- **SO-interface**
- **Alarm sensor for reed contacts**
- **For operating on the I-Port**

Dimensions:

LCN-BU4L (H x W x D):	37 x 92 x 66,5 mm 61,5 mm via DIN rail
Space requirement:	2 DU
Installation::	REG on 35 mm mounting rail (DIN 50022)

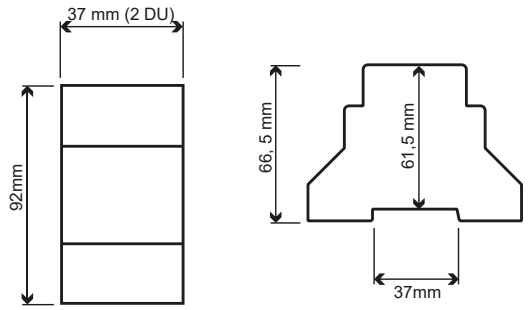

General details:

Operating temperature:	-10 to 40 °C
Humidity:	max. 80% rel., non condensing
Environmental conditions:	stationary installation according to VDE632, VDE637
Degree of protection:	IP 20

Technical data

Connection

Power supply:	230 VAC ±15%, 50/60 Hz optional 110 VAC
Inputs:	20-30 VDC (optional with external power supply) 10-30 VAC (optional with external power supply)
terminals/wire type (power side):	screwless, solid max. 2,5 mm² or strand wire with ferrules max 1.5 mm², loop, amp. max.16 A
terminals/wire type (input side):	screwless, solid or strand wire 0.5-1,5 mm²

Function

inputs/push-button function:	potential free through optocoupler 4, Short, Hold, Release (with 4 control LED´s), push-button converter table A, key 1-4 or 5-8 table B, key 1-4 or 5-8 SO-interface = variables can be freely chosen alarm sensor = table B, keys 1-4 or 5-8
On-level:	10 VAC, > 14 VDC
Off-level:	6 VAC, < 8 VDC
query current:	1 mA
debouncing time:	25 ms (push-button converter), 500 ms (binary sensor)
alarm sensor:	resistance value 1 W-30 kW 3 functions for contact open, closed and resistance
S0-impulse input:	max. 30.000 pulses/h (9 Hz)
LCN-connection:	I-Port cable length 300 mm (plugged), over LCN-IVH
cable length (inputs):	extendable up to max. 50 m. max. 100 m each input (use twisted pair cable), Use twisted, shielded cable, Connect the shield to the circuit ground (M)

Circuit diagram

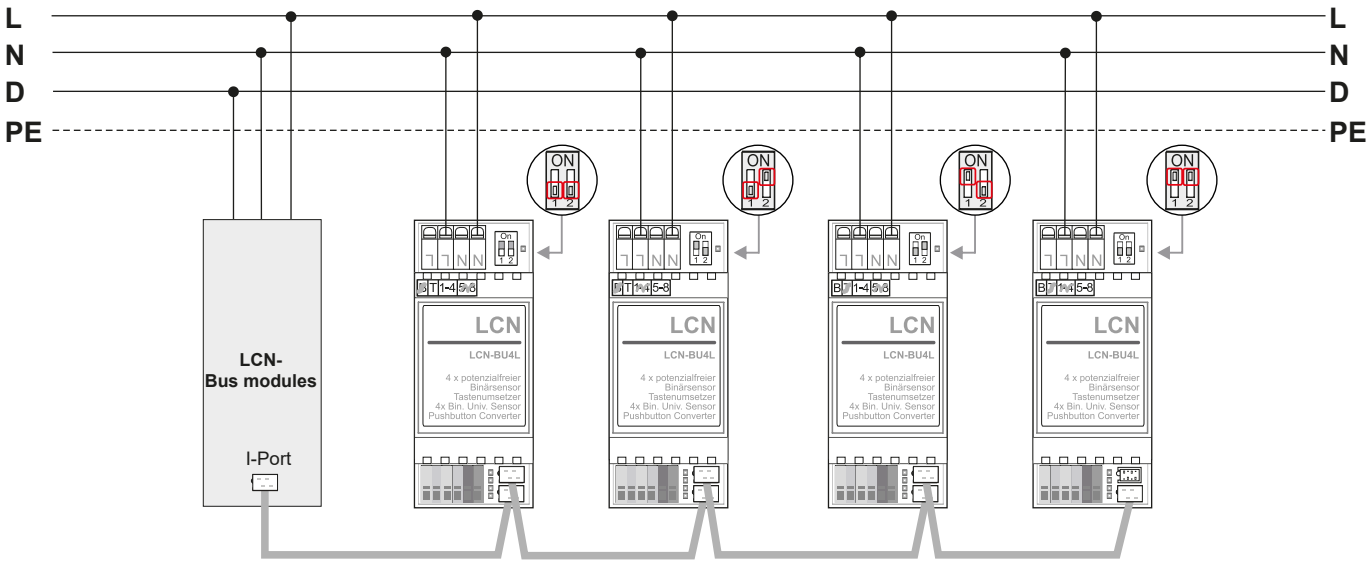

... as push-button converter ... as binary input

LCN-TU4C

Capacitive key sensor with four sensor pads for wall mounting

The key converter LCN-TU4C opens up entirely new ways and means of making keys invisible. It enables the capacitative requesting of up to four sensor pads. Each of the four keys is made of foil and can be stuck behind wood, natural stone and tiles etc. The sensor keys are operated by touching the wall surface. The LCN-TU4C is designed to be used with the LCN-UPP, LCN-UPU or LCN-UPS modules and can also be used with LCN-HU, LCN-SH and LCN-LD. And, of course, all of the LCN-functions are accessible on each key with the three commands Short, Hold and Release.

Description

The LCN-TU4C converts four push button sensor signals at the LCN module‘s I-Port. The sensor pads are self adhesive and can be fitted behind any non-conductive material. This results in new methods of design where luxury wall coverings and layout of furnishings are concerned: e.g. when a cupboard covers a switch panel, the sensor-keys can simply be stuck inside the cupboard.

Hardware

- Four Sensor Keys
- Cable with plug for I-Port
- Screwless terminals

Note:
The speed at which the key is touched bears influence on signal detection. Behind very thick depressant materials (e.g. wood that is not quite dry), maximum sensitvity is achieved through a swift touch of the key. For further details please refer to the installation guide.

LCN-TU4C

Capacitive key sensor with four sensor pads for wall mounting

- **Four invisible capacitive keys**
- **For concealing behind noble walls**
- **For installing in furniture**
- **Self-adhesive sensors for bonding behind walls**
- **For operating on the I-Port**

Technical data

Connection

Supply Voltage:	via I-Port
Keys:	Capazitive, Short, Hold, Release Table A up to four key cycles. 4 control LEDs to show the inputstate.
Terminals:	screwless
Wire type:	max. 0.8 mm (check polarity)
Max. connection distance to the sensor-keys:	500 mm (not extendabel)
Sensivity:	20-30 mm depending on material and desired sensitivity
LCN-Connection	I-Port cable length 160 mm, about LCN-IVH extended to max. 50 m

General details:

Operating temperature:	-10 to 40 °C
Humidity:	max. 80% rel., non condensing
Environmental conditions:	stationary installation according to VDE632, VDE637
Degree of protection:	IP 20

Dimensions:

LCN-TU4C (Ø x H):	50 x 20 mm
Connetion to sensor keys:	500 mm
Sensor surface one key	60 x 60 mm (L x W):
Assembly:	decentralized installation in deep flush-mounted box

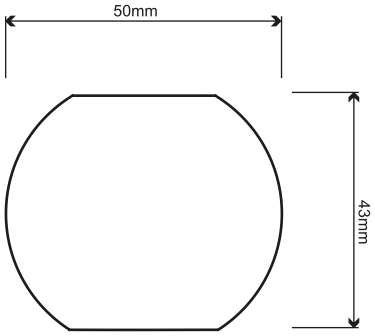

Circuit diagram

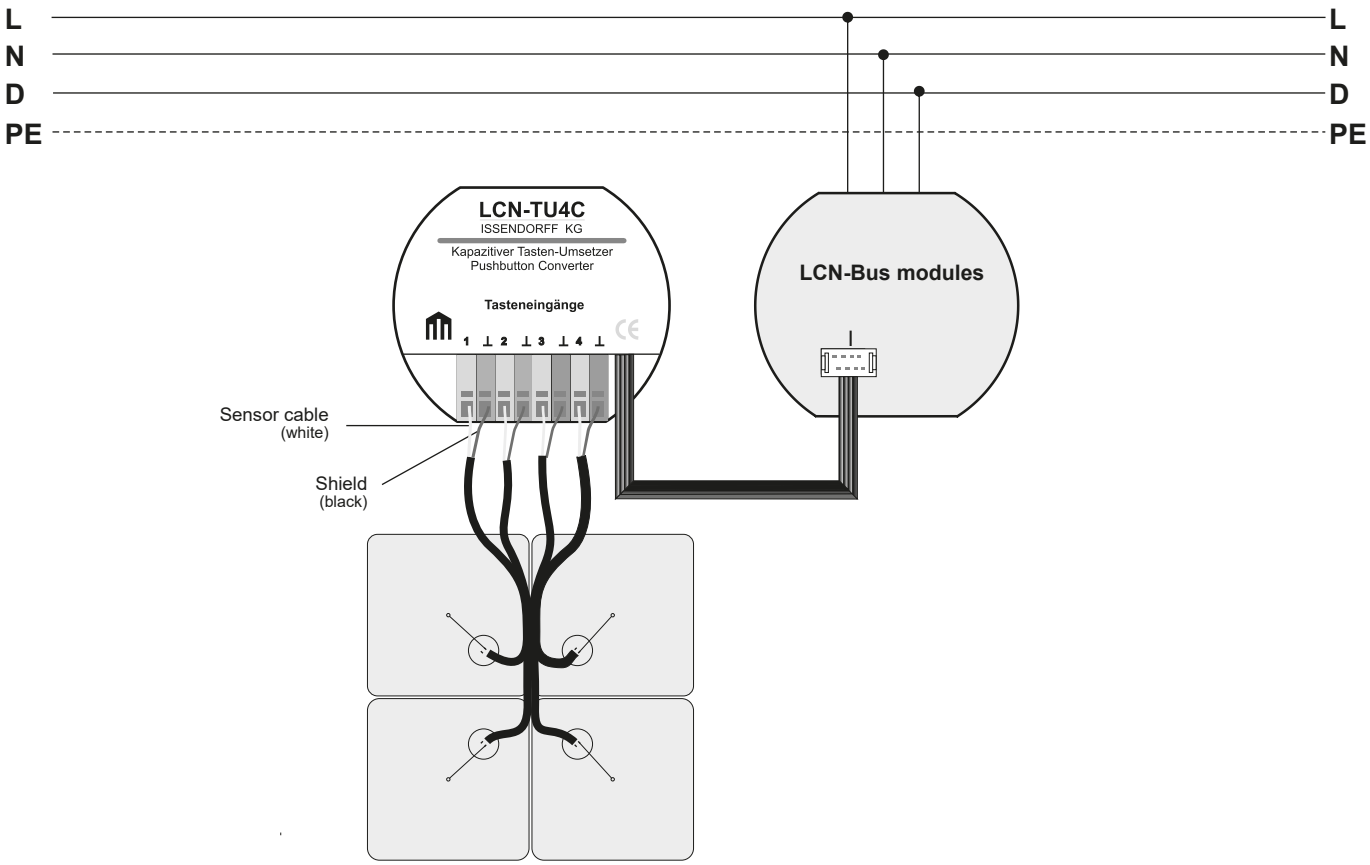

LCN-TL6

Push-button converter for GIRA SPS for flush mounted box

The LCN-TL6 is a converter for GIRA SPS push-buttons. It is intended for use with LCN-UPP, LCN-UPS, LCN-UMR or LCN-UPU modules.

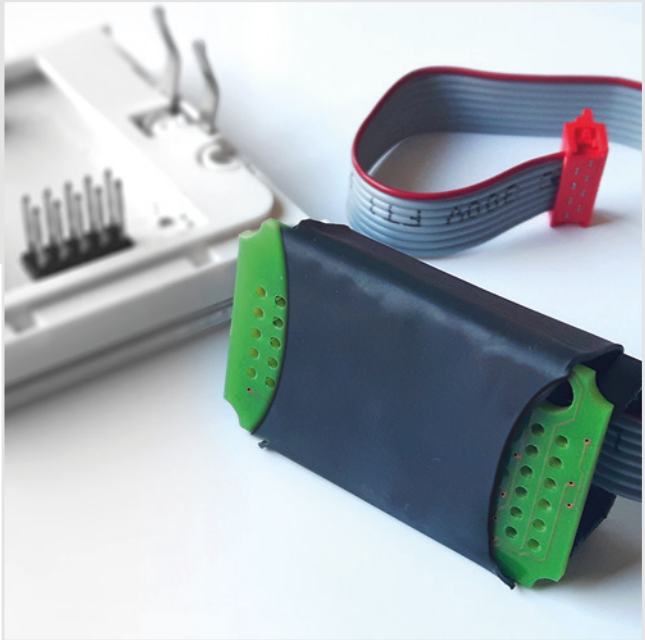

Description

The LCN-TL6 can be used for the evaluation of a single or triple GIRA button (one-way order no. 2001 or three-way 2003). The keys of table A, Short, Hold and Release, are executed. The six status LEDs are controlled individually via the T-Port connection and configured via LCN-PRO as On, Off, Flashing and Flickerig. To operate the button backlight, an external power supply is required (LCN-NUI, not included).

Hardware

- Cable with plug for T-Port connection

Note:
The LCN-TL6 is automatically detected by modules as of firmware 1B07 (July 2017). Older modules from firmware 1706 … do not recognize the LCN-TL6. They can still be used with a workaround when manually setting the “LCN-GT6 with Corona” setting on the T-Port .The brightness and key backlighting is controlled by the “GT Brightness” command. For detailed information, please refer to the installation guide.

LCN-TL6

Push-button converter for GIRA SPS for flush-mounted box

- **For evaluating 1-way and 3-way GIRA push-buttons**
- **Controls six status LED´s**
- **Automatic recognition with firmware 1B07 or later**
- **For operating on the T-Port**

Technical data

Connection:

Power supply:	optional LCN-NUI
LCN-Connection	T-Port, 180 mm

General details:

Operating temperature:	-10 to 40 °C
Humidity:	max. 80% rel., non condensing
Environmental conditions:	stationary installation according to VDE632, VDE637
Degree of protection:	IP 20, when installed in in a flush-mounted box

Dimensions:

LCN-TL6 (L x W x H):	27 x 42 x 20 mm
Supply Cable:	180 mm
Installation:	decentralized installation in deep flush-mounted box

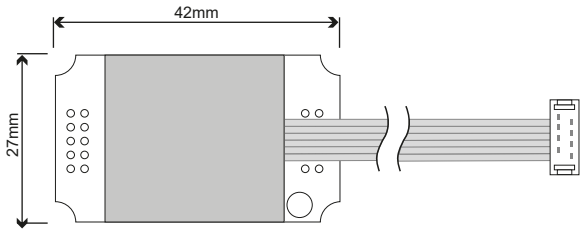

Circuit diagram

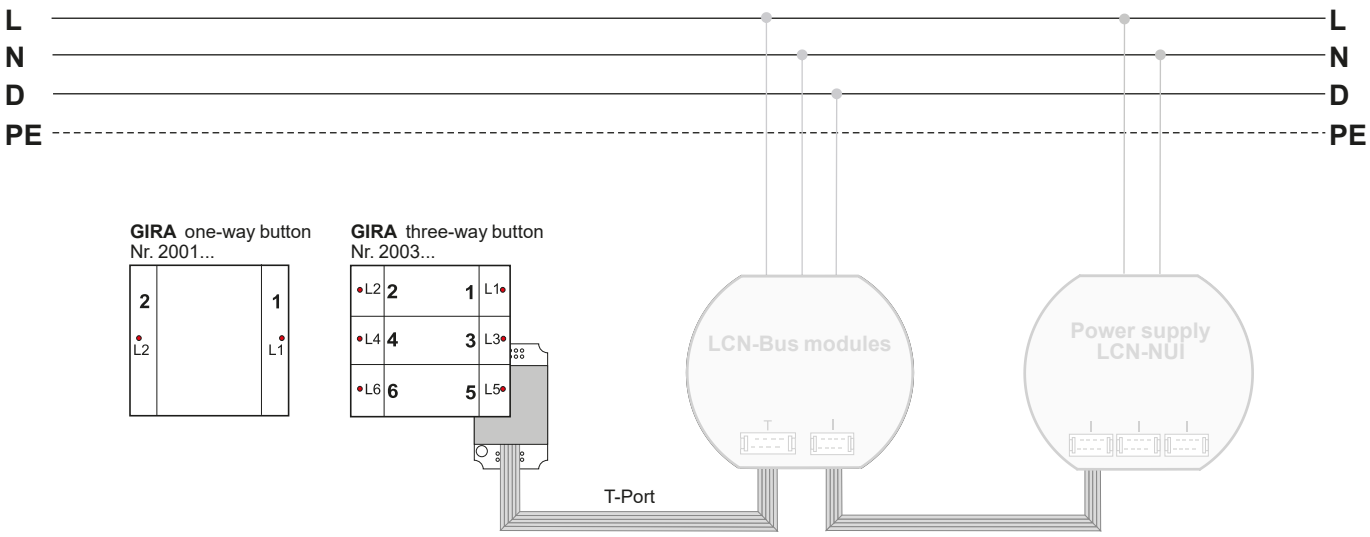

LCN-TL12R

Tableau converter for eight potential-free keys and twelve LEDs with com. cathode

The LCN-TL12R converts any eight potential-free keys on the T-Port connection of the LCN bus module. In addition the LCN-TL12R controls twelve LEDs with or without a series resistor. Each key recognises the established commands: Short, Hold and Release. It is designed to be used with the LCN-UPP, LCN-UPU or LCN-UPS modules; it can however be used with the LCN-HU, LCN-SH and the LCN-LD modules.

Description

The LCN-TL12R can connect to potential free KNX key sensors such as the Jung series 2224 and 2248 or the Berker four-way TS glass sensor. A further possible application is for controlling conventional tableaus/control panels with up to twelve LEDs. The LEDs can be used with or without inbuilt series resistors. For LED control, the states On, Off, Flashing and Flickering are supported. The outputs are power sources with switchable current outputs 2 mA/10 mA to control the LEDs.

Hardware

- Cable with plug for T-Port connection
- Cable with tin-plated ends for the in/outputs
- Screw terminals for connection of the LCN-NU9.

Note:
In addition an LCN-NU9 is required for supply of the LEDs. Input cable extendable to 5m. Not suitable for permanent contacts. For more detailed information please refer to the installation guide.

LCN-TL12R

Tableau converter for eight potential-free keys and twelve LEDs with com. cathode

- **Tableau converter**
- **For 8 keys**
- **Controls up to twelve LED´s with common cathode**
- **Connected to T-Port**

Technical data

Connection

Power supply:	LCN-NU9 or power supply 16-30 VDC (regulated)
power consumption:	< 0.05 W
terminals/wire type:	solid wire up to 1.5 mm², strand wire up to 1 mm², with ferrules up to 0.75 mm²
LCN-connection:	T-Port cable length 180 mm, not extendable
Wire type LED outputs:	0,08 mm Ø , length 200 mm, wire ends tin coated, extendable up to max. 5 m with shielded cable
Inputs/push-button function:	8, Hit, Hold, Release for potential-free push buttons no permanent contacts, extendable up to max. 5 m with shielded cable
Outputs:	12, for connecting LEDs directly, as well as for LEDs with series resistor < 1 kΩ, source current 2 or 10 mA, switchable

General details:

Operating temperature:	-10 to 40 °C
Humidity:	max. 80% rel., non condensing
Environmental conditions:	stationary installation according to VDE632, VDE637
Degree of protection:	IP 20

Dimensions:

LCN-TL12R (Ø x H):	50 x 20 mm
Installation:	decentralized installation in deep flush-mounted box

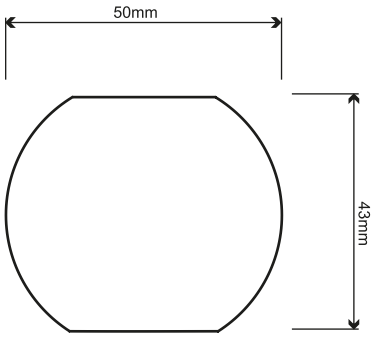

Circuit diagram

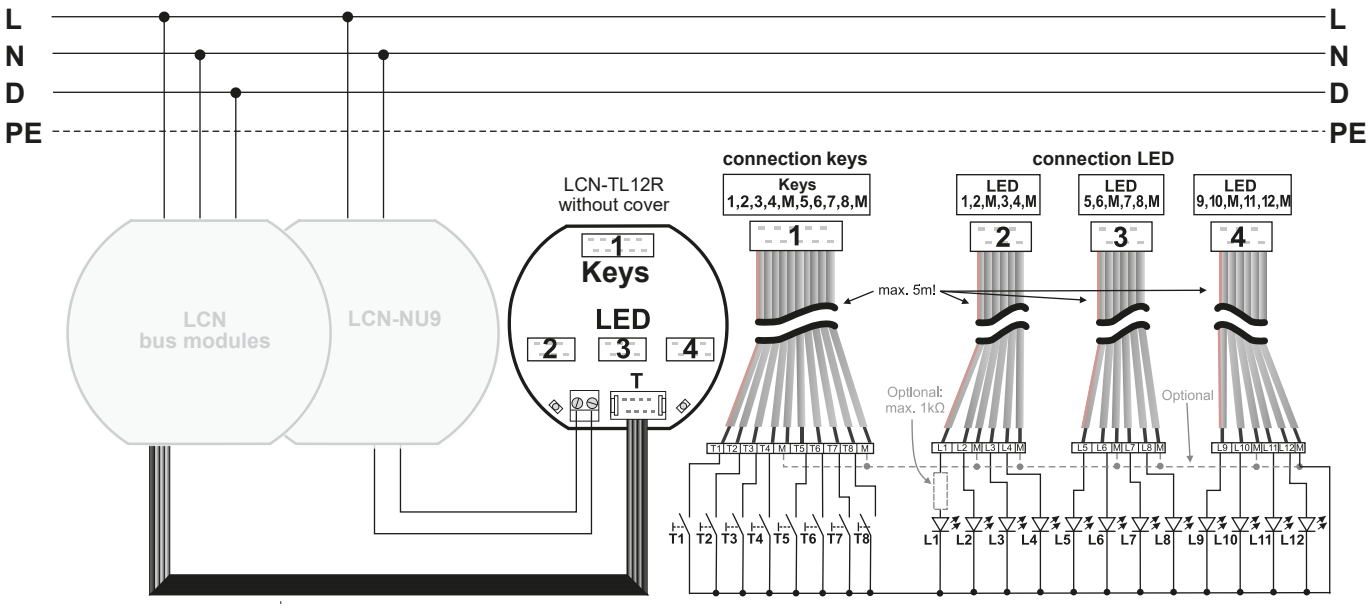

The connection cable for the keys and LEDs lead to N-Potential.
The connections marked with "M" are bridged in the module! At least one connection must be connected.

LCN-TL12H

Tableau converter for eight potentional-free keys and twelve LED´s with com. anode

The LCN-TL12H converts any eight potential-free keys at the T-Port connection of an LCN bus module. Twelve LEDs can be controlled for indicating any status on the bus. Brightness can be set on two levels. For LED control, the states On, Off, Flashing and Flickering are supported. The outputs are power sources with switchable current outputs 1.8/15 mA to control the LEDs. Each key recognises the established commands Short, Hold and Release. It is designed to be used with the LCN-SH, -HU, -LD or LCN- SHS modules.

Description

The LCN-TL12H is designed for connecting to conventional tableaus/ control panels with keys and LED indicators. Light-emitting diodes of any colour and with or without inbuilt series resistors max 1.2 KOhm/ 24 Volt, can be controlled in any combination.

The outputs are power sources i.e. Every output accordingly adjusts its output voltage to the connected LED automatically. It is possible to operate several LEDs in a row from one output (total forward voltage < 24 Volt!) All of the outputs are short-circuit proof. The outputs work with respect to ground/earth; all of the connected LEDs are connected to LCN-TL12H via the anode on the joint connection terminal.

Hardware

- Cable with plug for T-Port connection
- Loop-through terminals for power supply line
- Operation LED
- Indicator LED visible externally for all twelve outputs
- Built-in power supply unit with over temperature protection

Note:
Not suitable for permanent contacts!

For more detailed information please refer to the installation guide.

LCN-TL12H

Tableau converter for eight potentional-free keys and twelve LED´s with com. anode

- **For conventional tableaus/ control panels**
- **Converts any eight potential free keys**

Technical data

Connection

Power supply:	230 VAC ±15%, 50/60 Hz optional 110 VAC
power consumption :	< 5 W
Terminals/wire type:	solid wire up to 1.5 mm², strand wire up to 1 mm², with ferrules up to 0.75 mm²
LCN-connection:	T-Port cable length 250 mm, not extendable
inputs/push-button function:	8, Short, Hold, Release for potential-free push buttons - no permanent contacts, extendable up to max. 5 m with shielded cable
outputs (power source):	12, for connecting to LED´s, all colours, LED with series resistor for max. 24 V, max. 1.2 kΩ). source current 1.8 or 15 mA (switchable) extendable up to max. 5 m with shielded cable

Installation

Operating temperature:	-10 to 40 °C
Air humidity:	max. 80% rel., non condensing
Environmental conditions:	stationary installation according to VDE632, VDE637
Degree of protection:	IP 20

Dimensions:

LCN-TL12H (L x W x D):	62 x 92 x 66,5 mm 61,5 mm via DIN rail
Space requirement:	4 DU
Installation:	on 35 mm mounting rail (DIN 50022)

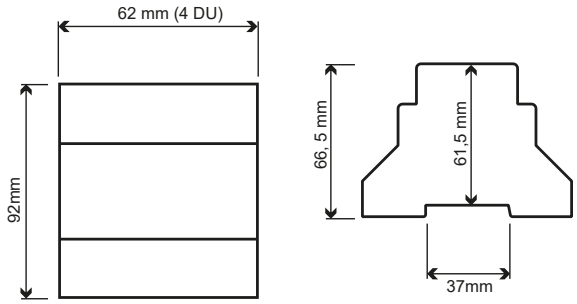

Circuit diagram

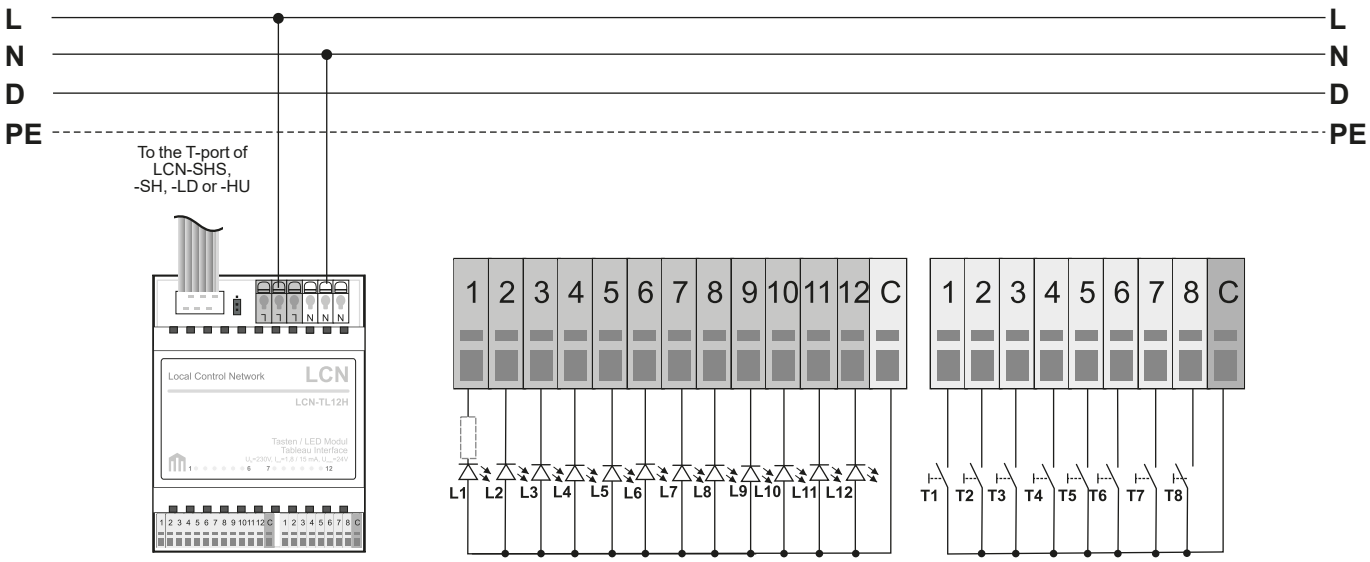

The connecting cables for the switches and LEDs lead N potential!

LCN-TLK12H

Tableau converter for eight potentional-free keys and telve LED´s with com. cathode

The LCN-TLK12H is designed for connecting to conventional tableaus/control panels with keys and LED indicators. Light-emitting diodes of any colour and with or without inbuilt series resistors (max 1.2 KOhm, 24 Volt) can be controlled in any combination.

Description

The LCN-TLK12H converts any eight potential-free keys at the T-Port of an LCN bus module. Twelve LEDs can be controlled for indicating any status on the bus. Brightness can be set on two levels. The outputs are power sources. Every output accordingly adjusts its output voltage to the connected LED automatically. It is possible to operate several LEDs in a row from one output (total forward voltage < 24 Volt!) All of the outputs are short-circuit proof. The outputs work with respect to ground/earth; all of the connected LEDs are connected to LCN-TLK12H via the cathode on the joint connection clip.

For LED control, the states´On, Off, Flashing and Flickering are supported. The outputs are power sources with switchable current outputs (1.8/15 mA) to control the LEDs. Each key recognises the established commands: Short, Hold and Release. It is designed to be used with the LCN-SH, -HU, -LD or LCN- SHS modules. LCN-TLK12H is used as a replacement device for LCN-DI12.

Hardware

- Cable with plug for T-Port connection
- Loop-through terminals for power supply line
- Operation LED
- Indicator LED visible externally for all twelve outputs
- Built-in power supply unit with over temperature protection

Note:
Not suitable for permanent contacts! For more detailed information please refer to the installation guide.

LCN-TLK12H

Tableau converter for eight potentional-free keys and telve LED´s with com. cathode

- **For conventional control panels**
- **Converts any potential-free keys**

Technical data

Connection

Power supply:	230 VAC ±15%, 50/60 Hz optional 110 VAC
Power consumption:	< 5 W
terminals/wire type: (net side)	screwless, solid max. 2.5 mm² or strand wire with ferrules max 1.5 mm², loop through current max. 16 A
Terminals/wire type:	screwless, solid or strand wire 0.5-1.5 mm²
LCN-connection:	T-Port wire length 250 mm, not extendable
Inputs/key function:	8, Short, Hold, Release for potential-free keys, no perma nent contacts, extendable to max. 5 m with shielded cable
Outputs (power source):	12, for connecting LEDs, all colours, LED with series resistor for max. 24 V (max. 1.2 kΩ), functions On, Off, Flashing, Flickering source currency 1,8 or 15 mA, switchable extendable to max. 5 m with shielded cable

Installation

Operating temperature:	-10 to 40 °C
Air humidity:	max. 80% rel., non condensing environmental conditions: use as stationary instalation according to VDE632, VDE637 protection
Protection art:	IP20

Dimensions:

LCN-TLK12H (L x W x D):	62 x 92 x 66,5 mm 61,5 mm via DIN rail
Space requirement:	4 DU
Installation:	on 35 mm mounting rail (DIN 50022)

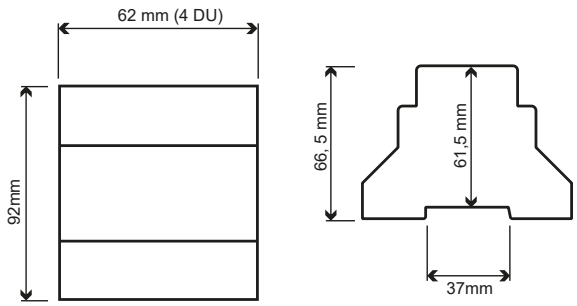

Circuit diagram

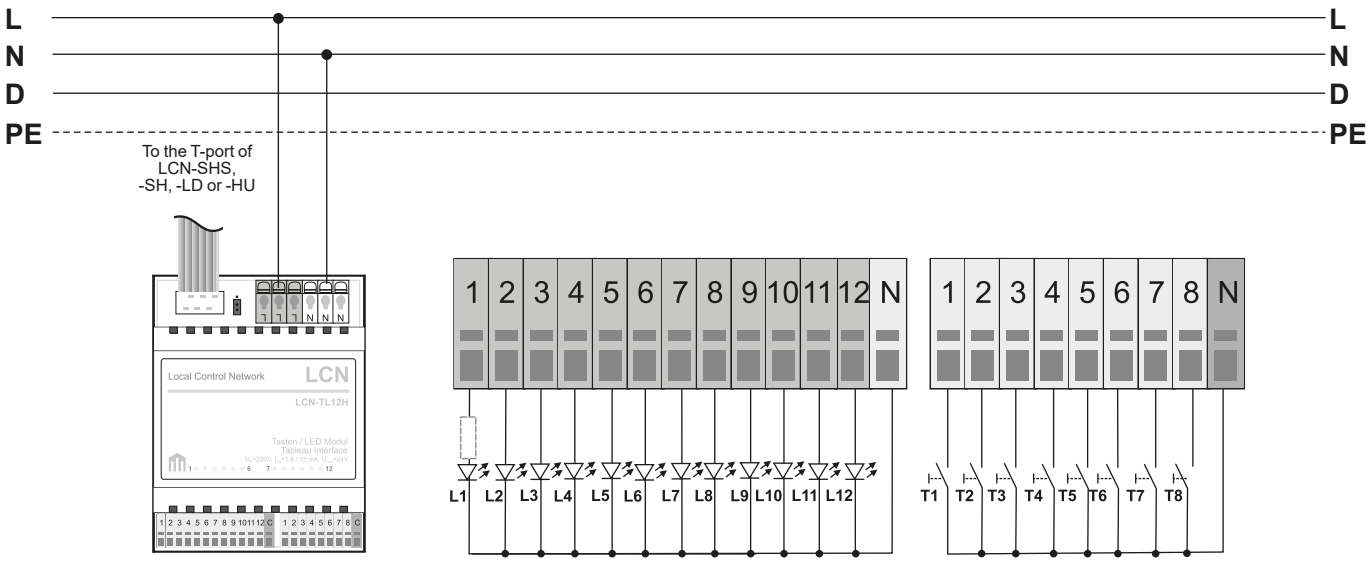

The connecting cables for the switches and LEDs lead N potential!

LCN-B3I

Triple binary input for the I-Port

The LCN-B3I is a miniaturized binary sensor for up to three potential-free contacts. It provides a sense voltage of 5 Volt. It has its own processor and sends information to the I-Port of the LCN-UPP, LCN-UPU, LCN-SH, LCN-HU or LCN-LD modules.

Description

Due to its compact form the LCN-B3I can be used in many places in the building. It integrates up to three permanent potential-free contacts onto the LCN system. These can be reed contacts, limit switches or other signal contacts. With these, windows, doors and smoke detectors can be integrated into the LCN system and reported upon.

Each binary input recognises the two states On and Off. The Hold command is carried out when the contact is closed; on opening the contact the Release command is carried out. An LCN module with a binary sensor automatically sends status messages along the bus without the need for programming this in the LCN module.

Hardware equipment:

- Three binary inputs and sense voltage
- Ribbon cable with plug for the I-Port connection

Note:
The “N” terminal refers to neutral and must not be put onto an external potential. The inputs are signal wires and are to be treated accordingly i.e separated from 230 Volt lines. Care must be taken when choosing the contact material for low interrogation current!

For more detailed information please refer to the installation guide.

LCN-B3I

Triple binary input for the I-Port

- **Three permanent potential-free contacts**
- **Connected to the I-Port**

Technical Data:

Inputs:

Power supply:	5 V, provided by the sensor (on N potential)
Querying current:	50 µA
Contact resistance On:	max. 10 kΩ
Contact resistance Off:	min. 200 kΩ
Debounce-time:	30 ms
Terminals:	for screwing
Cable type:	solid or strand wire max. 0.5 mm², with or without insulated ferrules.
Connection length:	max. 5 m, up to 100 m with shielded cable

General details:

Operating temperature:	-10 to 40 °C
Humidity:	max. 80% rel., no condensation
Environmental conditions:	stationary installation according to VDE632, VDE637
Degree of protection:	IP 20

Dimensions:

LCN-B3I (L x W x D):	11 x 25 x 13 mm
Supply Cable:	300 mm
Installation:	decentralized installation in deep flush mounted box

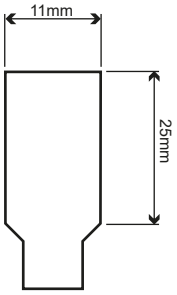

Circuit diagram

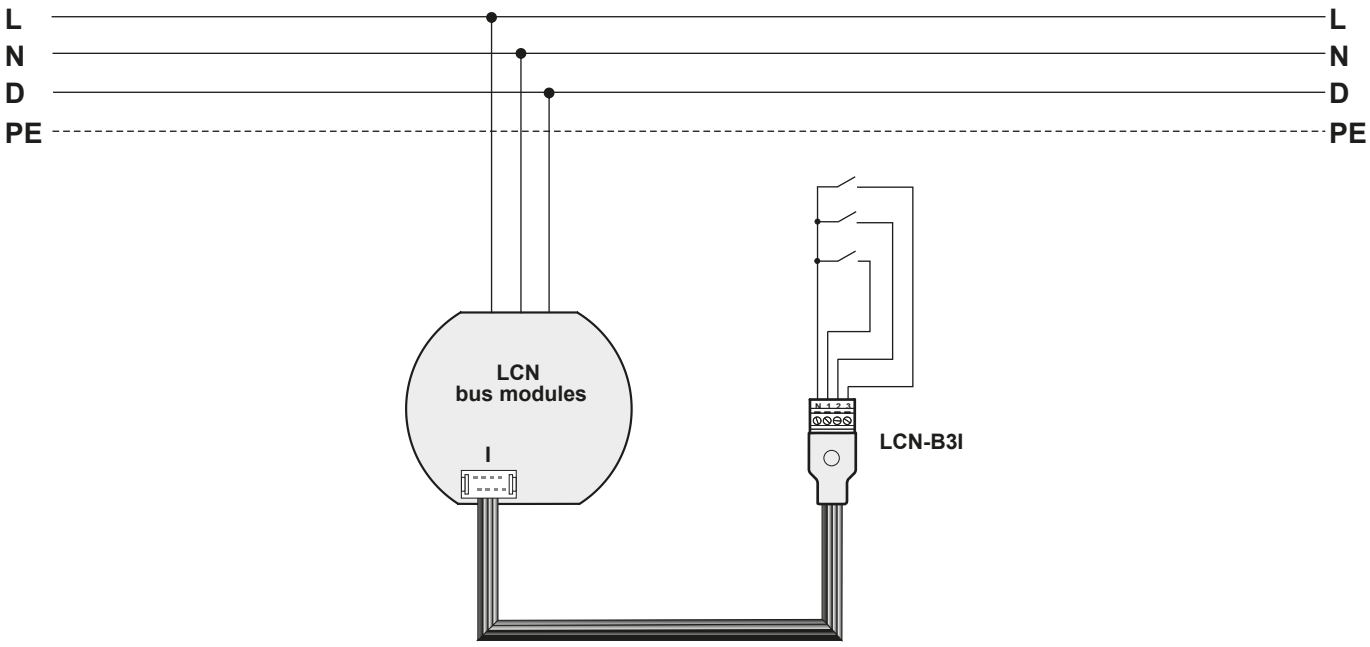

LCN-B3IN

Triple binary input with power supply for flush mounting

The LCN-B3IN evaluates up to three permanent potential-free contacts. It provides an internal sense voltage for this purpose. It also provides power of 5/12 V to the external sensors. With its connecting cables the LCN-B3IN connects to the I-Port of intelligent bus modules such as the LCN-HU, LCN-SH, LCN-UPP, LCN-UPU or LCN-UPS.

Description

The LCN-B3IN connects up to three permanent potential-free contacts into the LCN system. These can be reed contacts, limit switches or other signal contacts. With these, things such as windows, doors and smoke detectors can be integrated into the LCN system and reported upon. The LCN-B3IN has an internal power supply for use with sensors such as light barriers, hall sensors in shutter drives or the electronic evaluation of block locks.

Hardware

- Three binary inputs and query voltage
- Power supply 5/12 V for sensors which require an external supply
- Jumper for setting ,active, low or high
- Ribbon cable with plug for I-Port connection
- I-Port socket for further I-Port connectors

Note:
The terminal marked with “Z“ has N-potential. Only potential-free contacts may be connected. Care must be taken when choosing the contact material (low interrogation current). The inputs are signal wires and are to be treated accordingly i.e separated from 230 V lines. For more detailed information please refer to the installation guide.

LCN-B3IN

Triple binary input with power supply for flush-mounting

- **Three permanent potential-free contacts**
- **Internal sense voltage**
- **Provides power of 5/12 V to the external sensors**
- **Connected to the I-Port**

Technical Data:

Connection:

Power supply:	230 VAC ±15%, 50/60 Hz optional 110 VAC
Input power:	< 1 W
Connection power side:	2 strand wires 0.75 mm² (with insulated ferrules)

Inputs:

Input voltage:	5 V, provided by the sensor (WRT N)
Querying current:	50 µA
Contact resistance ON:	max. 10 kΩ
Contact resistance OFF:	min. 200 kΩ
Debounce time:	30 ms
Cable length:	max. 5/100 m with shielded cable

Sensor supply:

Sensor voltage:	5/12 VDC
Sensor current:	max. 25 mA (permanently short-circuit safe)
Terminals:	for screwing
Wire type:	solid or strand wire max. 0.5 mm² with insulated ferrules

General details:

Operating temperature:	-10 to 40 °C
Humidity:	max. 80% rel., non condensing
Environmental conditions:	stationary installation according to VDE632, VDE637
Degree of protection:	IP 20

Dimensions:

LCN-B3IN (Ø x H):	50 x 20 mm
Supply Cable:	160 mm
Installation:	decentralized installation in deep flush mounted box

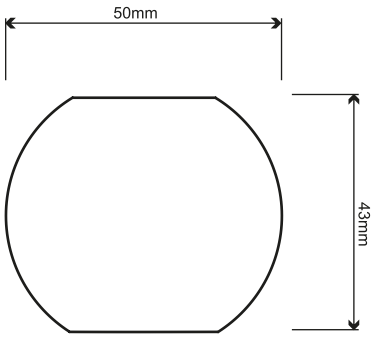

Circuit diagram

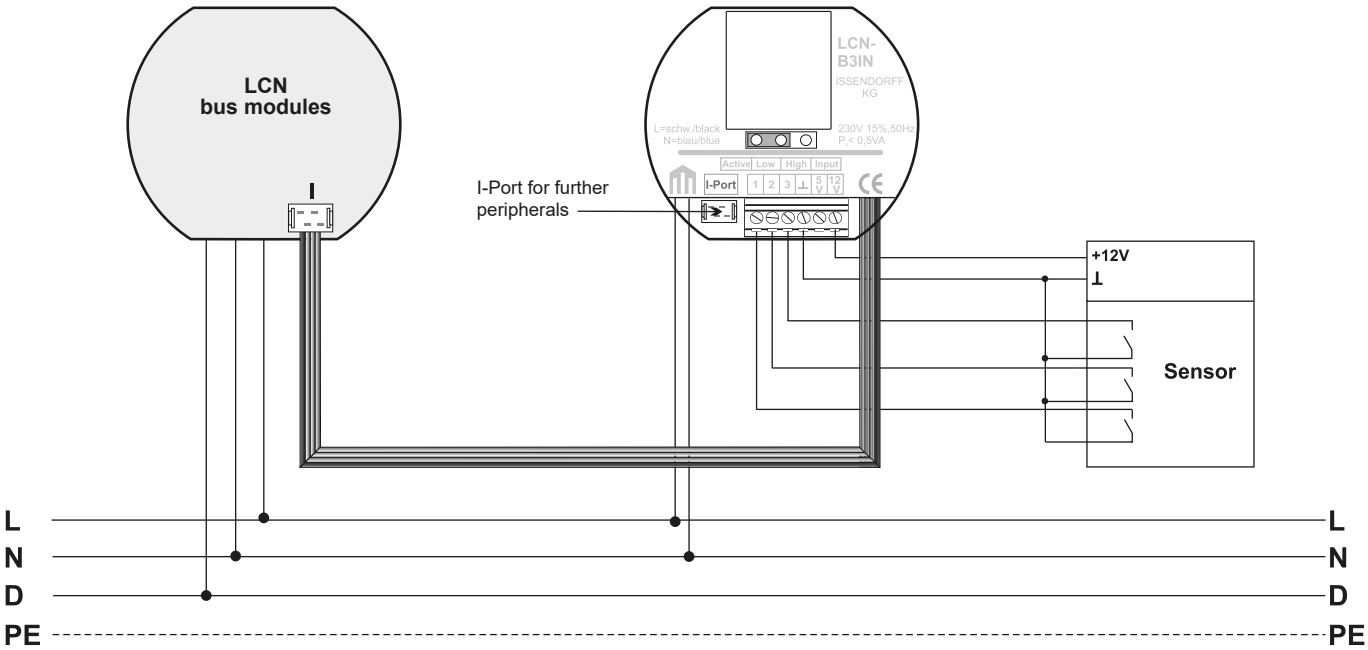

LCN-BS4

Current sensor 4 x 16 A for DIN rail mounting

The LCN-BS4 is a quadruple binary current sensor for the LCN system. Inputs 1 and 2 can be used for AC motor positioning with limit switches.

Description

The LCN-BS4 is connected to the P-Port of intelligent bus modules such as the LCN-HU, LCN-SH or LCN-LD. Upon exceeding the upper current limit the Hold command is triggered by the bus module; when falling below this limit a Release command is triggered. LCN modules with binary sensors automatically send status messages to the intelligent bus module; there is no need to set parameters.

Hardware

- Four binary monitored current paths 16 A
- Four current paths for motor positioning
- Cable with plug for P-Port connection
- P-Port socket for optional connection of relay block
- Four status LEDs

Note:
Only for devices with a minimum current of greater than 120mA Below this limit smaller motors may only drive in one direction. Limit switches are needed for the positioning of AC motors.

LCN-BS4

Current sensor 4 x 16 A for DIN rail mounting

- **Quadruple binary current sensor**
- **For AC motor positioning**
- **Connected to the P-Port**

Technical Data

Inputs:

Input voltage:	230 VAC ±15%, 50/60 Hz optional 110 VAC
On-current:	> 120 mA
Off-current:	< 100 mA
Power loss:	2 W per input at full load
Debounce time:	500 ms (30 ms adjustable)
Max. current:	16 A
Terminals:	screwless
Wire type:	16 A solid or strand wire max. 2.5 mm² or with insulated ferrules max. 1.5 mm²)
Cable length:	max. 100 m per input

General details:

Operating temperature:	-10 to 40 °C
Humidity:	max. 80% rel., non condensing
Environmental conditions:	stationary installation according to VDE 632, VDE 637
Degree of protection:	IP 20

Dimensions:

LCN-BS4 (L x W x H):	62 x 92 x 66,5 mm 61,5 mm via DIN rail
Supply Cable:	120 mm
Space requirement:	4 DU
Installation:	TH35 on 35 mm mounting rail (DIN 50022)

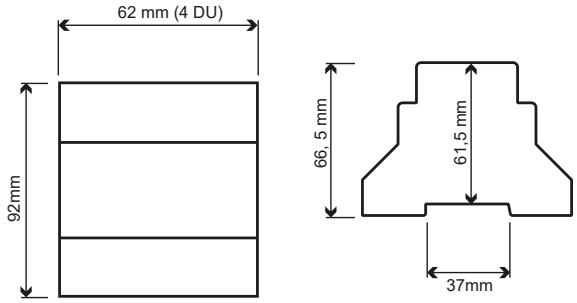

Circuit diagram

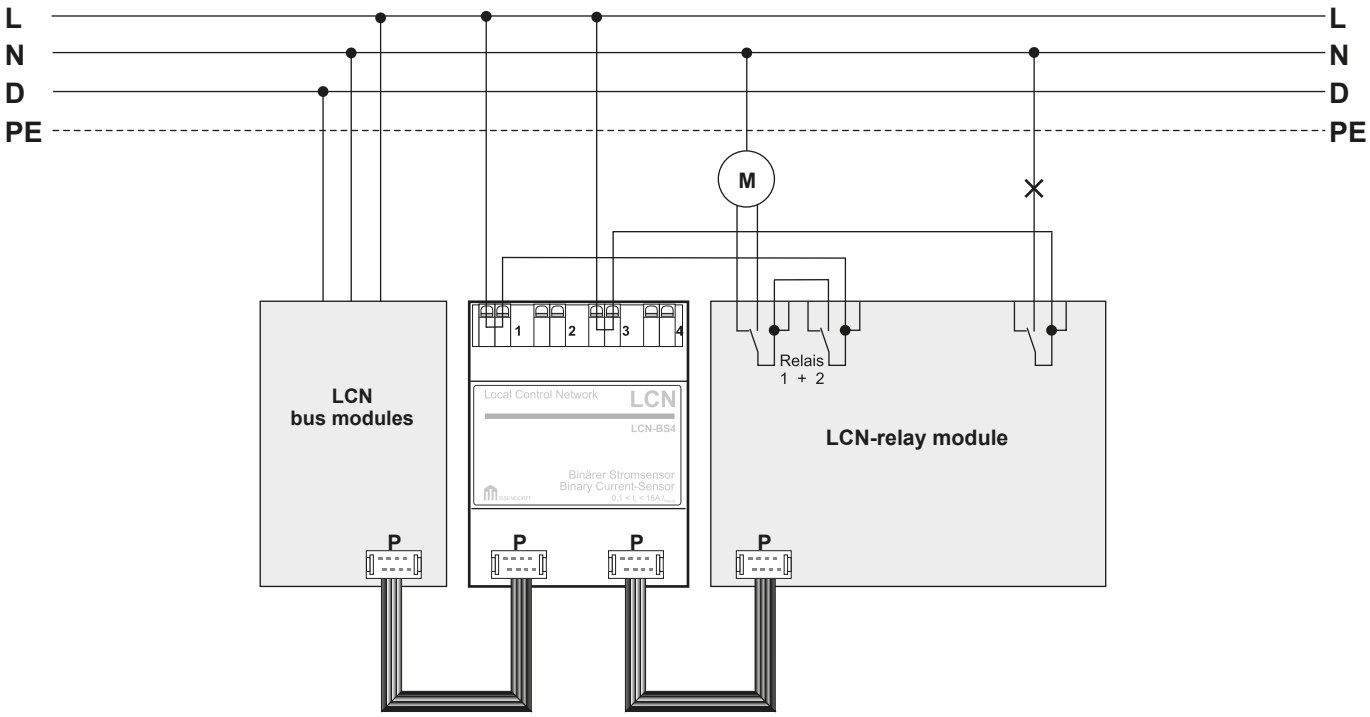

LCN-TXR

KNX push-button adapter for flush-mounting

The LCN-TXR couples to the KNX bus for the connection of KNX push buttons. It contains a KNX power supply and a USB interface for direct connection of the ETS.

Description

The LCN-TXR can simultaneously convert up to 2 KNX buttons to LCN. It supports not only the buttons themselves, but also the display LEDs, measured values and displays. As usual with LCN, each individual button can be assigned 3 commands (short, long, go). The module has an I-port for an LCN bus module, e.g. LCN-UPP, LCN-UPS, etc.

Hardware

- LCN-TXR
- i-port connection cable

Requirements

- BUS module as of firmware 1F0105 (January 2021)
- LCN-PRO from version 6.9.0 (June 2021)
- KNX software ETS from version 5 (for programming the KNX push buttons, free demo of ETS limited to 5 modules is sufficient).

Functionality

The KNX push button must be programmed once with the ETS to the appropriate KNX groups. To do this, download the free (demo) version of the ETS. The LCN-TXR has a KNX bus interface that works together with the ETS. Via its KNX interface, the LCN-TXR provides a KNX bus for KNX push buttons, it converts LCN functions to KNX groups. An overview of the KNX groups used by LCN can be found in the installation manual. The LCN-TXR module is used in dry rooms in deep flush-mounted/electronic boxes directly behind buttons or sensors.

Note:
Only for devices with a minimum current of greater than 120mA Below this limit smaller motors may only drive in one direction. Limit switches are needed for the positioning of AC motors.

LCN-TXR

KNX push-button adapter for flush-mounting

- **For integration of KNX button adapter**
- **Connected to the I-Port**

Technical Data:

Connection:

Power supply:	110-230 AC ±15%, 50/60Hz
Input power:	<0,5W
Connection power side:	2 Litzen mit Aderendhülse 0,75 mm²
Bus module connection:	I connection
KNX connection:	plug connector for KNX terminal

General details:

Operating temperature:	-10 to 40 °C
Humidity:	max. 80% rel., non condensing
Environmental conditions:	stationary installation according to VDE632, VDE637
Degree of protection:	IP 20

Dimensions:

LCN-B3IN (Ø x H):	50 x 20 mm
Supply Cable:	160 mm
Installation:	decentralized installation in deep flush mounted box

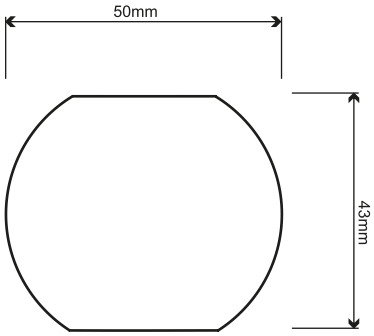

Circuit diagram

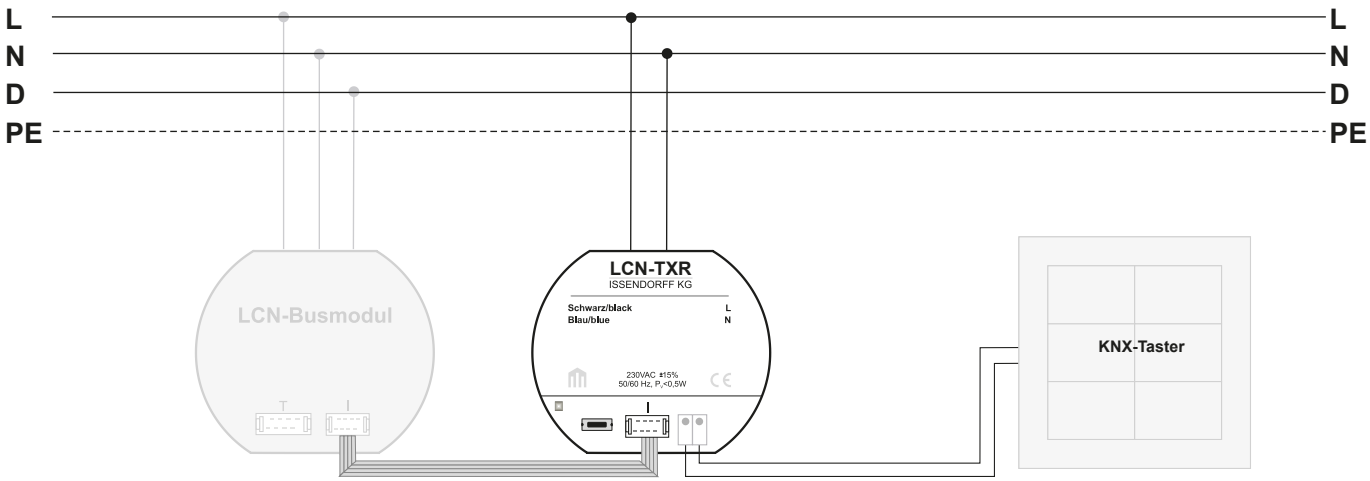

LCN | Sensors

LCN-TS

Precision temperature sensor (0,1°C) for the I-Port

The LCN-TS is an very small and high precision digital temperature sensor. It has its own processor and is almost completely silent in operation. The measured data is sent through the I-Port connection to an intelligent bus module.

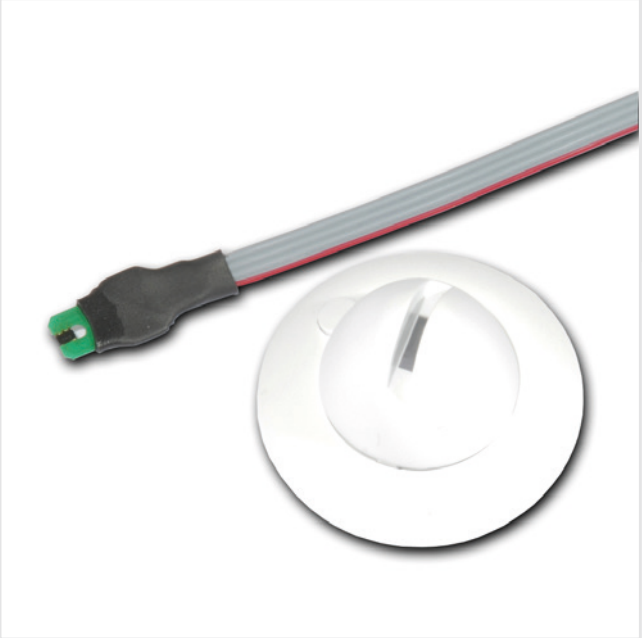

Application

The temperature sensor is used for measuring the room temperature. By connecting to further sensors within the LCN bus, an energy saving and user friendly single-room heating regulation system can be implemented which, among other things, includes control of the ventilation system.

The LCN-TS can be operated parallel with any other group on the I-Port connection of the LCN intelligent bus modules, like LCN-UPP, LCN-UPS, LCN-UPU, LCN-SH or LCN-HU. The modules allow for two continuous control circuits plus four switch thresholds which can also be automatically controlled. During operation, measured values can be exchanged among LCN modules and differences can be calculated.

Hardware

- Temperature sensor with adhesive pad
- Housing for wall and ceiling assembly
- Cable with plug for the I-Port connection

Note:
When positioning the sensor, care is to be taken with regards to heat sources from lighting and airflow as these can effect the measured value. For more detailed information please refer to the installation guide.

LCN-TS

Precision temperature sensor (0,1°C) for the I-Port

- **Temperature sensor for indoors**
- **For operating on the I-Port**

Technical Data

Sensor data:

Measuring range:	-20 to 85 °C
Resolution:	0.1 °C
Accuracy:	15 to 30 °C: typical 0.3 °C -20 to 85 °C: typical 0.6 °C

General details:

Operating temperature:	-20 to 85 °C
Humidity:	max. 80% rel., non condensing
Environmental conditions:	stationary installation according to VDE 632, VDE637
Degree of protection:	IP 20

Dimensions

Case (Ø x H):	50 x 25 mm
Sensor (L x W x D):	30 x 11 x 4 mm
Supply Cable:	400 mm
Assembly:	ceiling or wall assembly on 35 mm wall light box

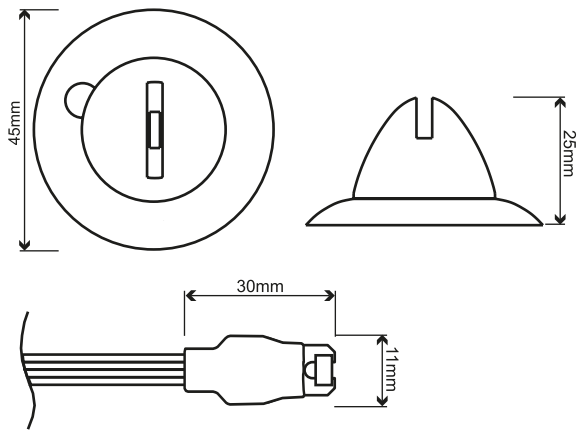

Circuit diagram

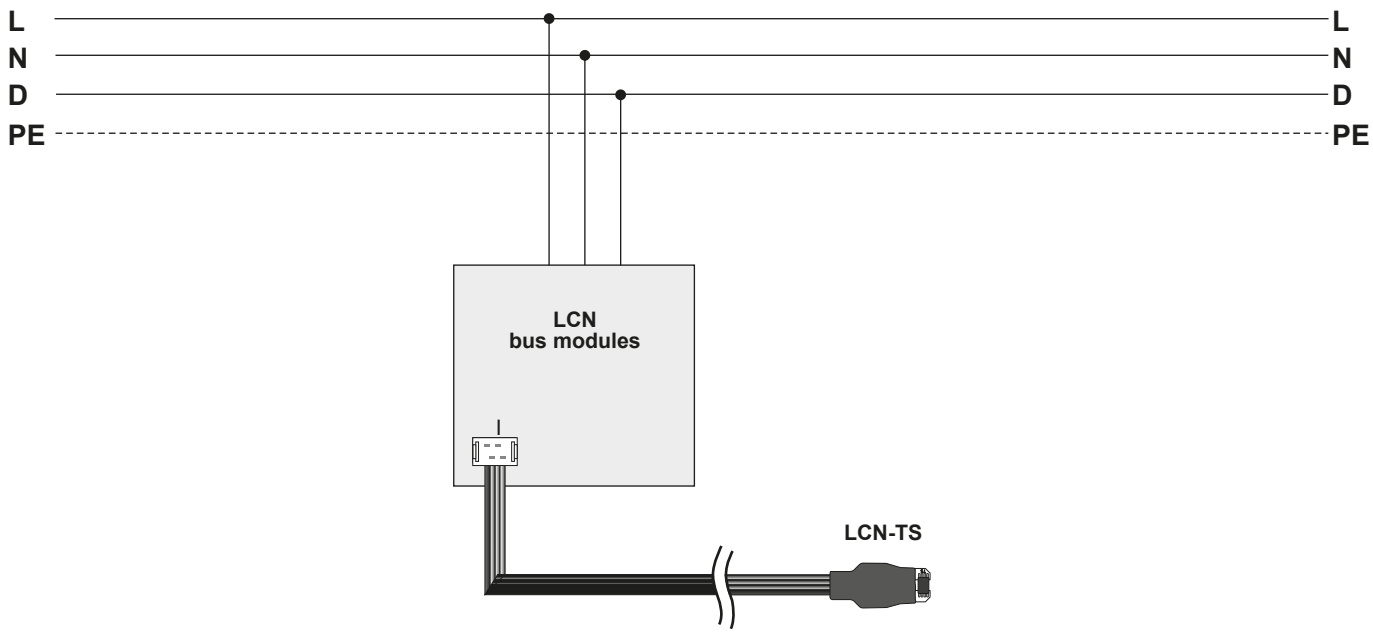

LCN-TST

Temperature sensor for outdoor and immersion sleeve mounting

As a high-precision, digital temperature sensor, the LCN-TST can be inserted into any 6mm immersion sleeve commonly used in heating and air conditioning construction. With its highaccuracy, the temperature gauge is a better alternative to the PT100/PT1000 sensor and can also be used outdoors with additional housing.

Application

The LCN-TST can be inserted into any 6mm immersion sleeve commonly used in heating and air conditioning construction. With its high accuracy, the temperature meter is a better alternative to PT100/PT1000 sensors and can also be used outdoors with additional housing. Up to two LCN-TST can be operated on one I-port of an intelligent LCN module. The determination of whether it is the first or the second LCN-TST is determined via a connection on the LCN-IV.

Further advantages:

very low thermal mass = very fast response time
no falsification of measured values when extending the connecting cable (I-connection, max. 50m)
The LCN-TST can be operated in parallel with any other module at the I-connection of all intelligent LCN modules such as LCN-UPP, -UPS, -UPS24, -SH, and -SHS. The modules allow two continuous control loops plus 16 threshold values, which can also be used for closed-loop control. Measured values can be exchanged between LCN modules during operation and differential values can be calculated.

Hardware

LCN-TST:
- Temperature sensor in protective mould

LCN-IV:
- Cable with plug to I-connection
- Two I-connections free for further periphery
- Screw terminals for cables up to 0.8 millimeter Ø

Note:
The assembly position and location may influence the recorded values: air-streams, mounting height and heat sources like heat radiating from lighting are all to be considered. If the supply cable is to be extended outdoors, then a terminal connector in IP65 protective casing is to be used. The supply cable can be extended up to 50 m.

For more detailed information please refer to the installation guide.

LCN-TST

Temperature sensor for outdoor and immersion sleeve mounting

Technical Data

Sensor data:

Mesured range:	-20 to 105 °C
Resolution:	0.1 °C
Accuracy:	15 to 30 °C: typical 0.3 °C -20°C to 105 °C: typical 0.6 °C
Supply cable:	2 m, LiYCY, strand wire

General details:

Operating temperature:	-20 to 105 °C
Environmental conditions:	stationary installation according to VDE 632, VDE637

Degree of protection:

Sensor LCN-TSA:	IP 65
LCN-IV:	IP 20

Dimensions

LCN-TSA (L x Ø):	60 x 5 mm
LCN-IV (L x W x D):	22 x 12 x 13 mm
Supply Cable:	2 m

Assembly:

LCN-TSA:	Roof or wall mount using cable clip
LCN-IV:	Decentral Installation

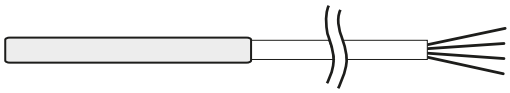

Circuit diagram

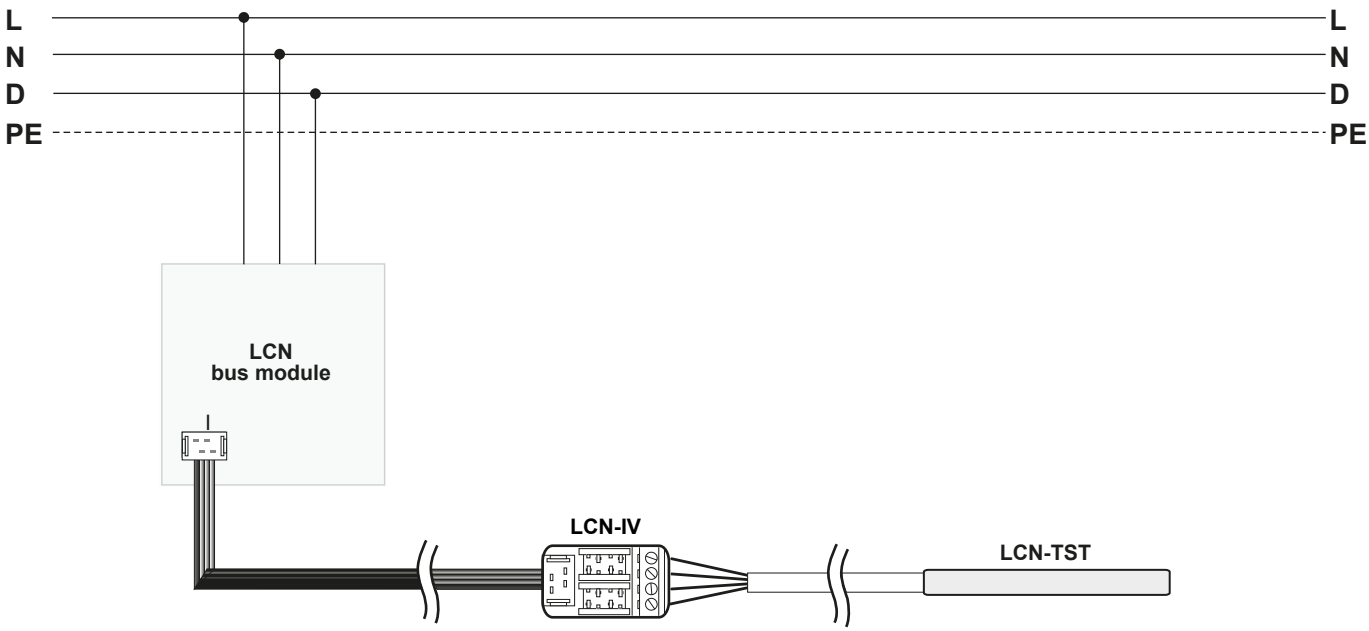

LCN-PMI

Passive infrared presence/motion detector

The LCN-PMI is an indoor presence/motion detector for connection to intelligent LCN modules. The sensor works according to the PIR principle (passive infrared). It detects the change in thermal radiation of a human body.

Application

The presence/motion detector LCN-PMI detects the movement of people by their heat radiation. It is used to switch on lighting in corridors, offices or WCs. Furthermore, it can take over alarm functions in building monitoring.

The presence/movement detector triggers the long command once as soon as it detects movement. If the object is only briefly in the detection range for up to two seconds, the release command is executed after four seconds. If the object is registered for longer, the release command is executed eight seconds after the last movement. The LCN-PMI automatically sends status messages even without parameterisation.

The LCN-PMI has a red LED for checking the detection range. The LED can be switched off by parameterisation. The sensitivity of the detection can be adjusted via LCN-PRO.

Hardware

- Jumpers for parallel operation of up to four LCN-PMI's
- Housing for wall or ceiling mounting
- Cable with plug for I connection of LCN modules from firmware 1702...(Feb.2013)

Note:
The installation location has a decisive influence on the sensitivity: Install the sensor in such a way that warm body parts such as the face are detected. The main direction of movement should be transverse to the sensor. For this reason, it is usually better to mount the sensor on the side rather than in the middle of the ceiling.

LCN-PMI

Passive infrared presence/motion detector

Technical Data

Connection:

Supply voltage:	not required (via I-connector)
Power consumption:	<0.1W
LCN connection:	I-connection line length 300mm

Presence detector

Sensor:	PIR passive infrared sensor
Range/opening angle:	max. 12m (club-shaped)/100° * 360
Switch-off delay:	5-8 seconds
Object speed:	min. 0.5m/s, depending on Temperature difference and size

General details:

Operating temperature:	-10 to 40 °C
Humidity:	max. 80% rel., non condensing
Environmental conditions:	stationary installment according to VDE 632,VDE 637
Degree of protection:	IP 20

Dimensions:

LCN-PMI (Ø x H):	45 x 19 mm
Supply Cable:	300 mm
Installation:	ceiling or wall installation on 35 mm wall light box

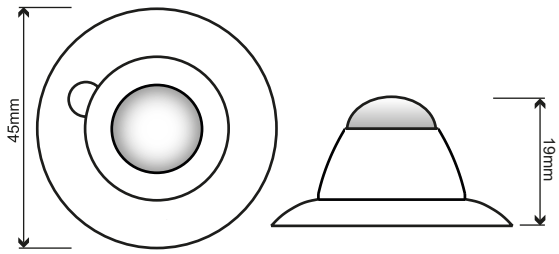

Circuit diagram

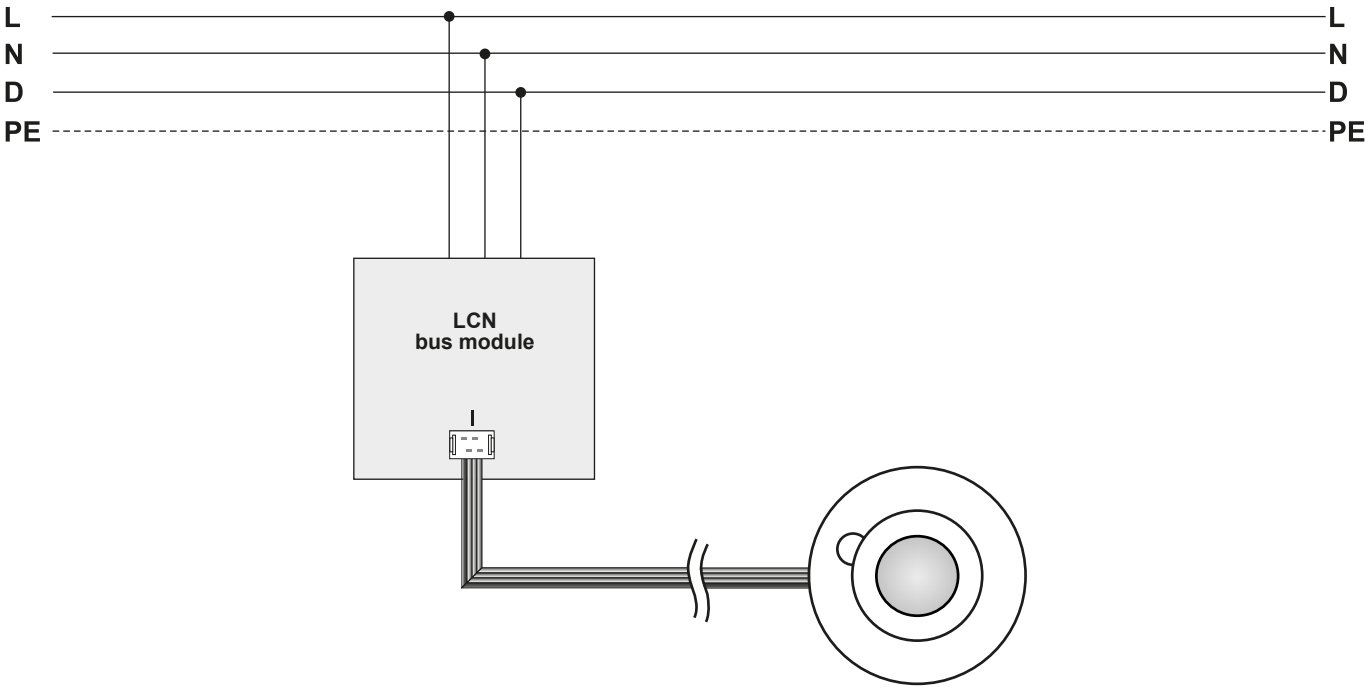

LCN-GUS | LCN-GUS68

Sensor for temperature, light, humidity, motion and IR receiver in glass design

The LCN-GUS is a temperature, light, humidity, motion sensor and IR receiver for surface mounting in the LCN-GT series design.The LCN-GUS can be operated with any LCN bus module with firmware 1702... (Feb. 2013) or later.

Application fields

The digital temperature sensor with its own processor supplies almost noiseless measurements and sends them via the I-Port connector to the connected LCN module. The integrated LCN-RR IR receiver allows the LCN-GUS to process the signals of LCN remote controls. The light sensor is used to register the brightness in rooms. The measured value can be used for constant light control in order to achieve ideal lighting conditions with simultaneous energy saving. The integrated light sensor covers a very large measurement range of five decades (1-100,000 lux).

The presence/motion detector identifies the motion of persons and objects by their thermal radiation. It can be used, optionally with the integrated light sensor, to switch lightings and for alarm functions in the building security area. The LCN-GUS can take effect on the controllers as well as the signal thresholds. Measured values can be exchanged between LCN modules and used for arithmetic operations.

Hardware

- Presence detector, light sensor, temperature sensor,
- IR receiver and humidity sensor
- Housing for wall mounting
- Cable with plug for I-Port
- Screw terminal for connection via low voltage cable (shielded)

Configuration

The LCN-GUS is detected automatically. The measured values can be seen in the status window of LCN-PRO.

DIP switch

The parallel operation of several LCN-GUS is possible with different positions of DIP switches.

Models:

LCN-GUS:
60 x 60 mm

Colour:	white	LCN-GUSW
	black	LCN-GUSB
	champagne	LCN-GUSC

LCN-GUS68:
90 x 90 mm

Colour:	white	LCN-GUS68W
	black	LCN-GUS68B
	champagne	LCN-GUS68C

Note:
The installation location and position have an influence on the measured values: the installation height and variable heat sources are to be observed. For ideal measurement sensitivity, it is recommended to install the LCN-GUS on the wall. The LCN-GUS can be combined with any I-Port peripheral equipment at the I-Port of all intelligent LCN modules with firmware 1702... (Feb. 2013) or later. The supply cable can be extended up to 50 m.

Detailed information can be found in the installation guide.

LCN-GUS | LCN-GUS68

Sensor for temperature, light, humidity, motion and IR receiver in glass design

- **Sensor with 5 functions; intregated IR-receiver, light sensor, temperature sensor, humidity sensor**
- **6 motion sensor**
- **For installing on walls or ceilings**
- **For operating on the I-Port**

Technical Data

Connection

Power supply:	not necessary (I-Port connection)
Power consumption:	6 mW
I-Port:	circuit connectors or spring clips

Presence detector

Range:	typ. 12 m
Method:	PIR (passive infrared)
Detection area:	110 x 360°
Debouncing time:	5-8 seconds

Temperature sensor:

Effective range:	-10 to 60 °C
Resolution:	0.1 °C
Accuracy:	typ. 0.2 °C from 5 to 60 °C

Light sensor

Measurement spectrum:	450-650 nm, typ. 560 mm
Measurement range:	1-100.000 lx
Accuracy:	±15% out of range

Humidity sensor:

Measurement range:	0-100%, non condensing
Resolution:	1% (relative humidity)
Accuracy:	±3% from 20% to 80%

Dew point:

Resolution:	0.1 °C
Accuracy at 20-80% humidity and 10-40 °C:	±2 °C

General data:

Operating temperature:	-10 to 60 °C
Humidity:	max. 80% rel., non condensing
Environmental conditions:	stationary installation according to VDE 632, VDE637
Degree of protection:	IP 20

Dimensions:

LCN-GUS (H x W x D):	60 x 60 x 15.5 mm (3 mm glass thickness)
LCN-GUS68:	90 x 90 x 18 mm (5 mm glass thickness)

Assembly:

LCN-GUS:	Wall mounted on 35 mm light outlet box or screw mounting. With the LCN-A6835 the adapter frame, 68 mm flush mounted boxes and cavity wall boxes can be reduced to the size of a 35 mm lamp outlet box.
LCN-GUS68:	With mounting plate for a 68 mm flush mounted wall-box
Frame:	Available in white or champagne customised special customized colours

LCN-GUS

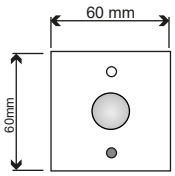

LCN-GUS68

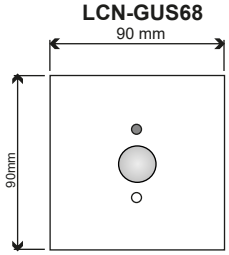

Circuit diagram

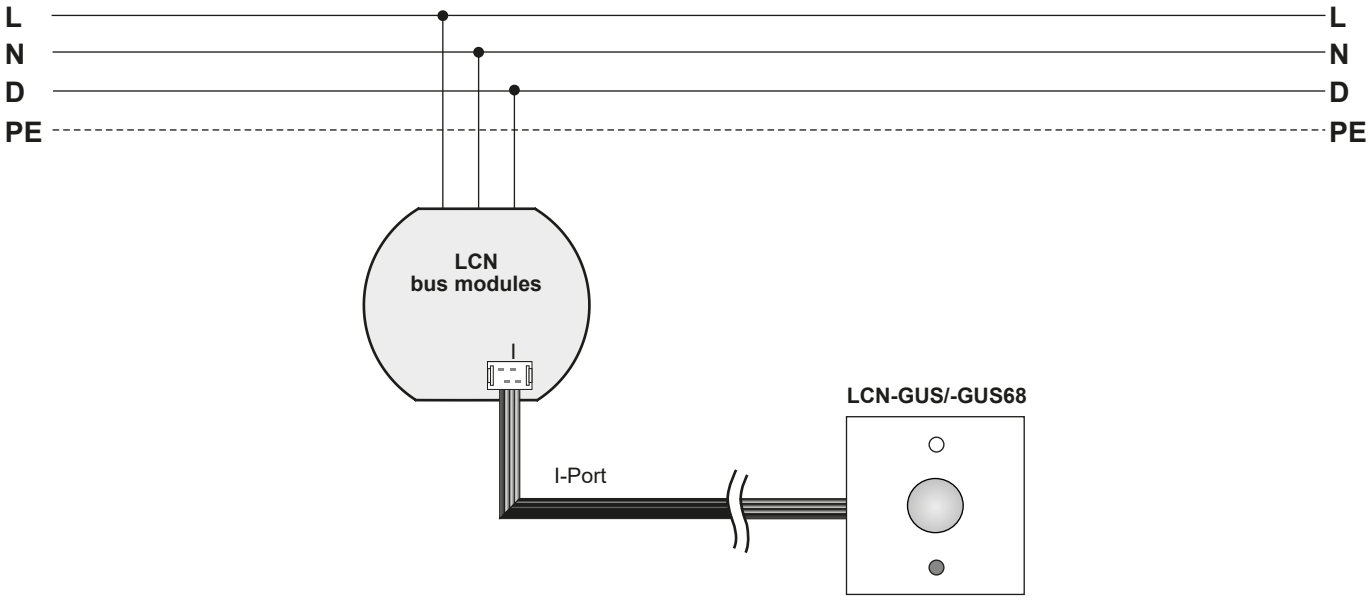

LCN-GSA4

Air quality sensor with four buttons

The LCN-GSA4 is a sensor for measuring air quality. In addition to the function of measuring and displaying the air quality, it has 4 buttons and an acoustic signal generator. The LCN-GSA4 is connected to the T-connector of LCN bus modules from firmware 1E0C07 (December 2020). The LCN-PRO from Ver. 6.8.8 is required for setup.

A Corona® light ring with white LEDs is used for decorative wall lighting and as a discreet orientation light, so that the LCN-GSA4 can be operated comfortably even in low ambient light

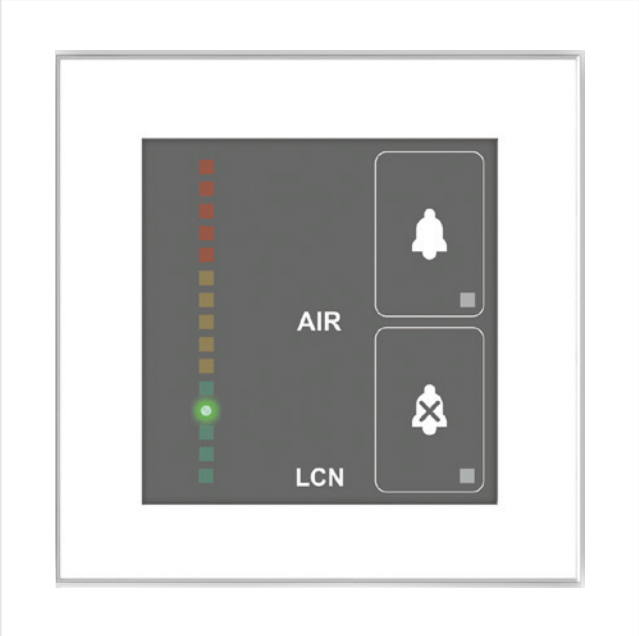

Description

The LCN-GSA4 measures the quality of the room air and uses this to determine the CO2 content of the air. Both values, air quality and CO^2, are made available in variables. These values can be used, for example, to control the bar graph of the LCN-GSA4 or to activate its alarm buzzer via threshold values. Furthermore, up to 4 keys can be used to trigger actions in the LCN bus.

The LCN-GSA4 is a precise measuring device for air quality and is ideally suited for regular and professional ventilation. It displays the air quality with a bar graph, prompts for ventilation with a red light ring and warns with beeps in case of further deterioration. The thresholds for the warnings are programmable. A Corona® light wreath with white LEDs is used for decorative wall lighting and as a discreet orientation light, so that the LCN-GSA4 can be operated comfortably even in low ambient light. If the Corona light wreath is to be used, an LCN-NUI (optionally available) is required.

Hardware

- LCN-GSA4
- Cable with plug for T-Port
- Mounting frame
- Installation guide

Models:

LCN-GSA4:
90 x 90 mm

Colour:	white	LCN-GSA4W
	black	LCN-GSA4B
	champagne	LCN-GSA4C

soon also available as an S version.

Note:
The corona light ring and the different brightnesses are only available with optionally available LCN-NUI

LCN-GSA4

Air quality sensor with four buttons

Technical Data

Connection

Power supply:	via the BUS module
LCN connection:	T-connection by means of T-connector plug, extension not possible

Function

Sensor:	Measurement of air quality, determination of CO2 content
LEDs:	bargraph, 4 status LEDs, White Corona® LEDs, Brightness adjustable

General details:

Operating temperature:	-10 to +40 °C
Humidity:	max. 80% rel., non condensing
Installation:	Stationary installation according to VDE 632, VDE 637
Degree of protection:	IP 20

Dimensions:

LCN-GSA4 (H x W x D):	90 x 90 x 12,5 mm
Assembly:	Wall or ceiling mounted on 68 mm light outlet box or screw mounting,
Frame:	Available in white, black or champagne customised special customized colours

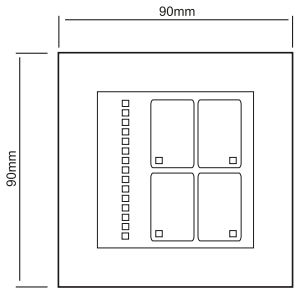

Circuit diagram

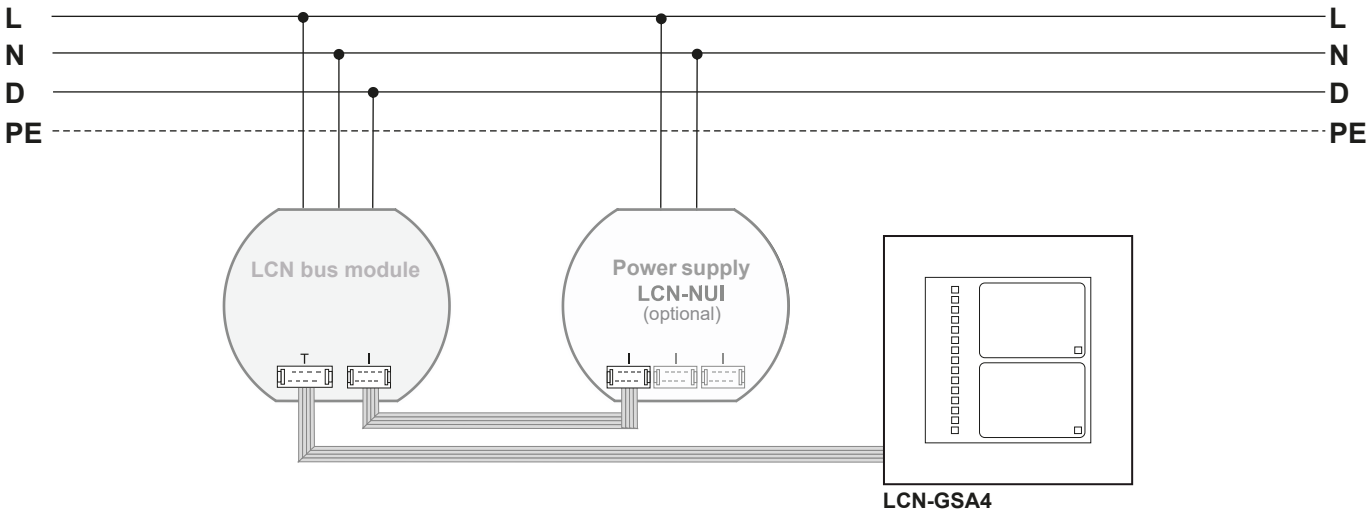

LCN-CO2

Carbon dioxide sensor (CO_2) for the I-Port

The LCN-CO2 is a CO_2 sensor for the indoor area. It can measure CO2 concentrations of 1-5000 ppm.

Application

The LCN-CO2 measures the carbon dioxide content (CO_2) of the air in the interior of buildings. This enables the energy-efficient control of ventilation and air conditioning systems and thus demand-oriented supply of fresh air. In this way, the LCN-CO2 makes an active contribution towards healthy room air quality. The sturdy, compact sensor uses an infrared-based spectroscopic measurement method to measure the carbon dioxide content of the air. It responds even to slightest changes to the air composition.

The LCN-CO2 can be combined with any I-Port peripheral equipment at the I port of all intelligent LCN modules like LCN-UPP, LCN-UPS, LCN-UPU, LCN-SH, LCN-SHS or LCN-HU. The LCN-CO2 can take effect on the R1 and R2 controllers as well as the signal thresholds 1-4. Measured values can be exchanged between LCN modules and used for arithmetic operations.

Hardware

- CO_2 sensor for determining the room air quality
- Housing for mounting on 68 mm flush-mounted socket
- Cable with plug for I-Port
- LCN-NU9 (power supply unit)

Note:
The LCN-CO2 is suitable for connection to the I-port of LCN-UPx, -SH, -SHS and -HU from serial number 170206 of February 2013.

LCN-CO2

Carbon dioxide sensor (CO_2) for the I-Port

- CO_2 sensor for indoor air quality determination

Technical Data

Connection:

Power Supply:	9V via LCN-NU9 (included in delivery)
Measuring range:	1-5000ppm
Input potential:	±30ppm ±5% from measured value
Resolution:	1ppm

Ports:

I-connection:	available / already in use

General data:

Operating temperature:	0 to 50 °C
Humidity:	max. 80% rel., non condensing
Environmental conditions:	stationary installation according to VDE 632, VDE637
Degree of protection:	IP 20

Dimensions:

LCN-CO_2 (L x W xH):	79 x 80 x 26 mm
Supply Cable:	280 mm
Mounting:	on 68 mm flush-mounted box or screw fixture

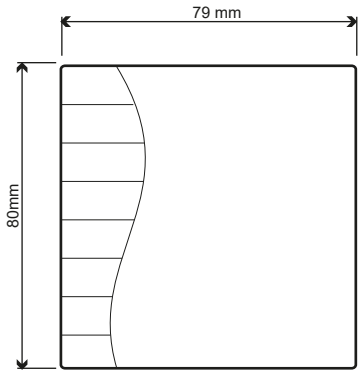

Circuit diagram

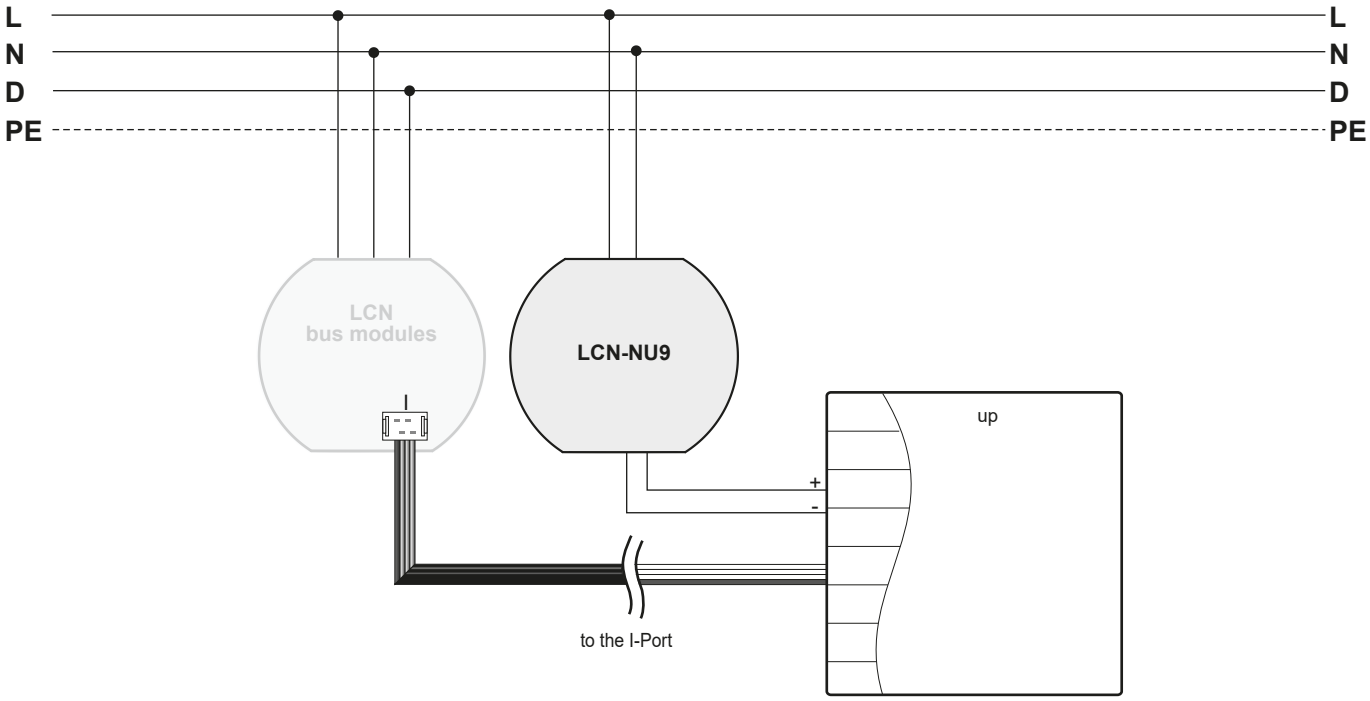

LCN-AD2

Double analogue to digital converter for DIN rail mounting

The LCN-AD2 is a 2 way analog to digital converter with a 12 Bit trigger for the I-port connection.

Application:

The LCN-AD2 is applied for the recognition of signals, for those that are not equipped with special sensors. for example sensors with very high temperatures, hygrometres, etc. The LCN-AD2 can be applied universally, because its inputs can be adjusted as follows:

- Voltage: 0-10V
- Electric current: 0(4)-20mA

The measured values are entered into the module as R1 and R2 variables. They work optional on the 4 threshold values or on both regulators.

Hardware equipment:

- Analogue input
- DIP-switch for setting the signal type
- Status-LED
- Flat cable for I-Port connection

Note:
The LCN-AD2 can be connected to an I-Port of an LCN module manufactured after series number 170206. This cable connection can be lengthened by using a LCN-IV, see also „TD I-Port peripherals“ (www.LCN.eu). For detailled information please read the installation guide.

LCN-AD2

Double analogue to digital converter for DIN rail mounting

- **Analog to digital converter**
- **12 bit resolution**
- **Universally applicable for :**
  Voltage: 0-10 Volt
  Current: 0(4) - 20 mA

Technical Data

Connection:

Power Supply:	230 VAC ±15%, 50 Hz
Wiring option:	screwless
Conductor type:	solid or strand wire max. 2.5 mm² or with insulated ferrules max. 1.5 mm²

Ports:

LCN-Port:	I-Port

Inputs:

Number:	2
Input potential:	max. 500 V towards N
Measuring range:	0-10 V, 0/4-20 mA,
Resolution:	12 bit
Wiring option:	screwless
Conductor type:	solid or strand wire 0.2-1.5 mm Ø or with insulated ferrules 0.5-1.38 mm Ø

General data:

Operating temperature:	-10 to 60 °C
Humidity:	max. 80% rel., non condensing
Environmental conditions:	stationary installation according to VDE 632, VDE637
Degree of protection:	IP 20

Dimensions:

LCN-AD2 (L x W xD):	37 x 92 x 66,5 mm
Supply Cable:	300 mm
Space requirement:	2 DU
Installation:	on 35 mm mounting rail (DIN 50022)

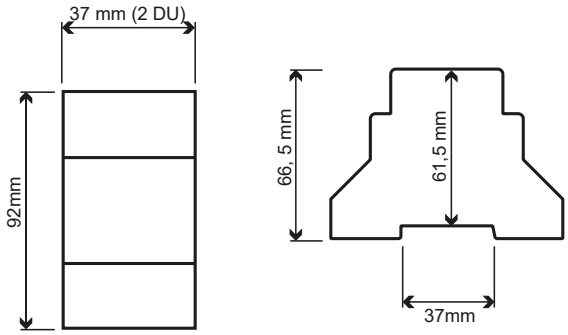

Circuit diagram

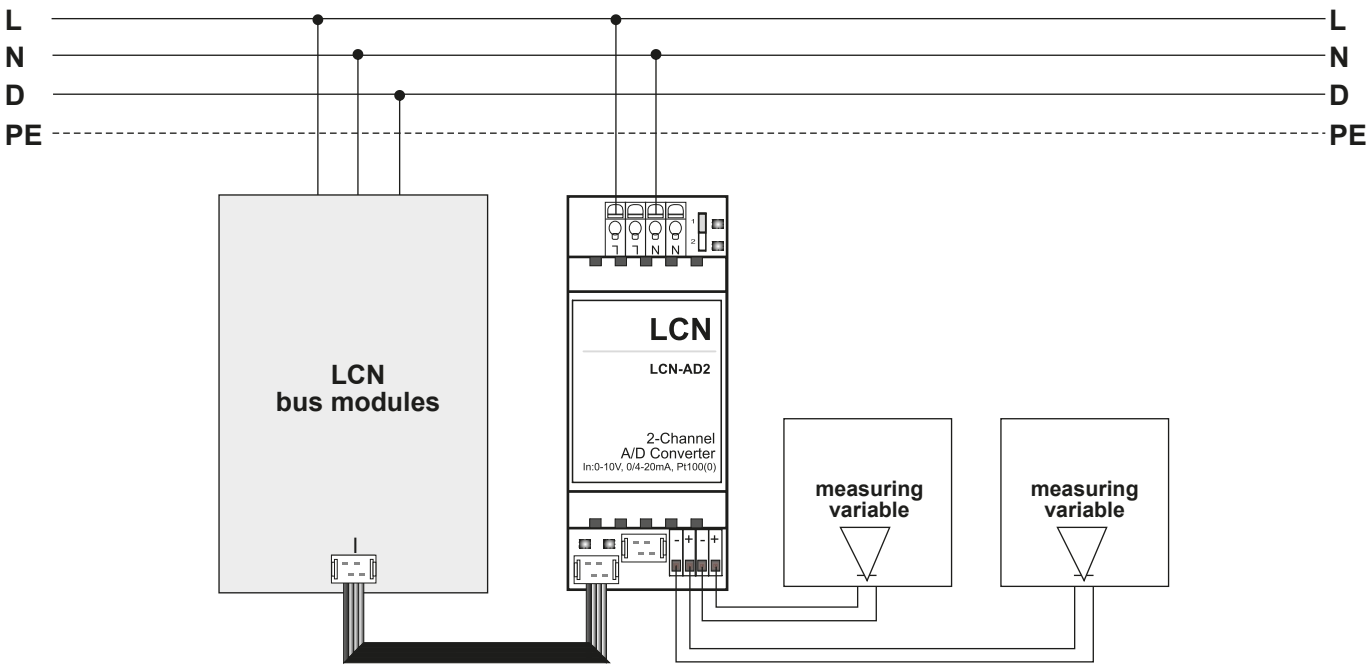

LCN-ZEA

GPS time receiver for the I-Port

The LCN-ZEA is a GPS time receiver for the I-Port

Description

The central european time (CET) is calculated from the UTC signal of the receiver. For operating in other time zones worldwide, the settings can be changed with the LCN-PRO. The toggling between summer and winter time is carried out automatically in all time zones.

The LCN-ZEA is recognized automatically. With normal receptional conditions, the sensor sends the central european time (CET) after around 3 minutes, over the I-Port to the module, then into the LCN bus. The LCN-ZEA can be operated on the I-Port of any LCN bus module with firmware 1702... (Feb. 2013) or later.

GPS receiver time zone:

The Central European Time CET is calculated from the UTC signal of the receiver. For use in other time zones worldwide, this setting can be changed with the LCN-PRO from version 4.8. The changeover summer-/wintertime is done automatically in all time zones.

The LCN-ZEA is automatically recognized. Under normal receiving conditions, the sensor sends the Central European time via the I-connection to the module after about three minutes and this then into the LCN bus. Delivery status: central european time (CET), configuarable. All worldwide summer time changes are supported.

Note:
A power supply LCN-NUI/-NIH is needed for operating. This is not included in the scope of delivery. For detailed information, please refer to the installation guide.

LCN-ZEA

GPS time receiver for the I-Port

- **receives the GPS signal**
- **sends precise time in the LCN bus**
- **connected to the I-port**

Technical Data

Connection

Power supply:	LCN-NUI/-NIH (over I-Port)
Power consumption :	0.2 W
LCN-connection:	I-Port extension
terminals/wire type:	screwless terminals 0.2-1.75 mm²

GPS-receiver

time zone:	delivery status: central european time (CET), configurable all worldwide summer time changes are supported.

General details:

Operating temperature:	-20 to 50 °C
Environmental conditions:	use as stationary installation according to VDE632, VDE637
Degree of protection:	IP 65

Dimensions:

LCN-ZEA (L x W xD):	51 x 51 x 36 mm
Mounting:	screw fixture

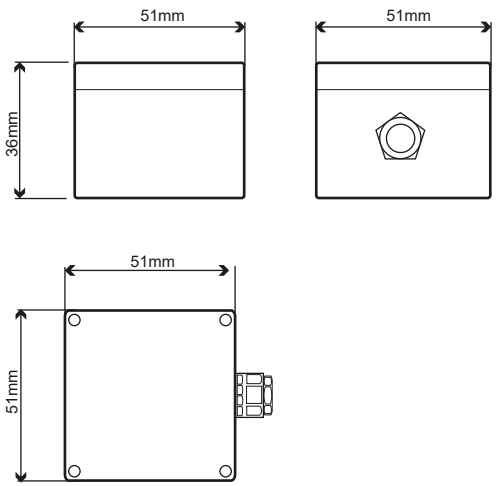

Circuit diagram

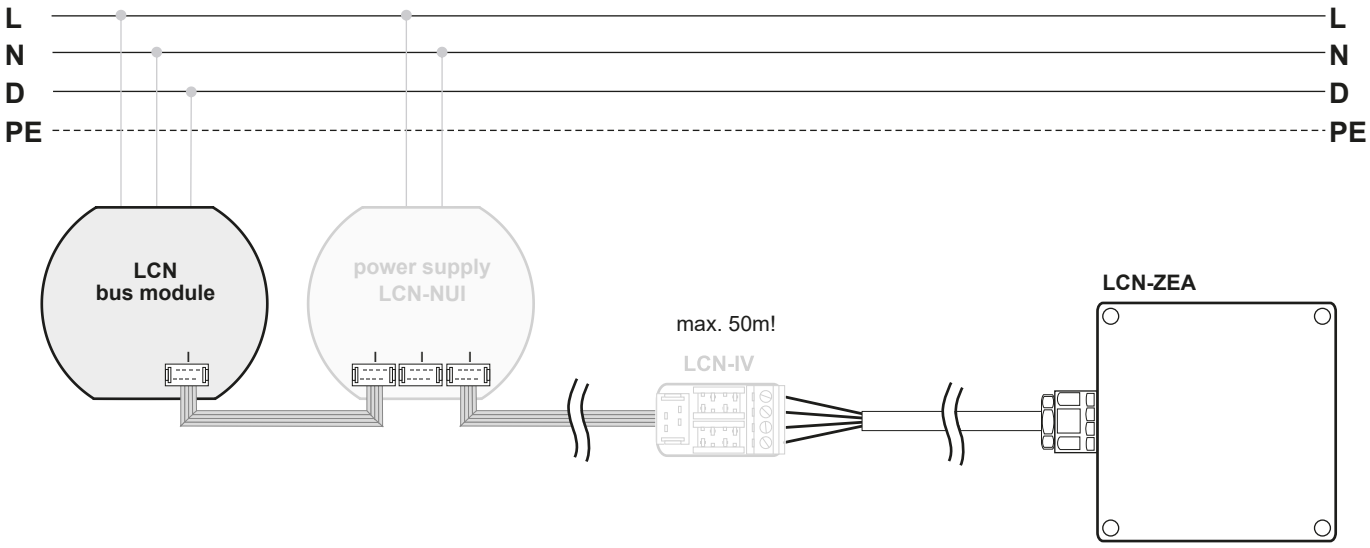

LCN-GFPS

Fingerprint sensor in GT design

The LCN-GFPS is a fingerprint sensor for the I-connection of any LCN module from firmware 190512 from May 2015. The LCN-GFPS scans fingerprints and transmits an automatically generated transponder code via the LCN bus to the access control of the LCN-GVS. Four integrated LEDs signal the recognition of the finger.

A Corona® light ring with 16 white LEDs serves as decorative wall lighting and as a discreet orientation light, so that the LCN-GFPS can be operated comfortably even in low ambient light. The LCN-GFPS is intended for installation in dry interior rooms.

Application

The LCN-GFPS is part of a "large" access control system with central management of biometric data by the LCN-GVS visualization. Once a finger has been taught in, it is automatically distributed to the stations where the user has authorization. The removal of a user is also carried out centrally via the LCN-GVS. In addition to access control, the LCN-GFPS is also suitable for all other tasks in the bus. It can send out any control telegrams. The LCN-GFPS is compatible with all LCN access control systems such as LCN-RT or LCN-ULT and can be used mixed with these systems.

Hardware

- LCN-GFPS
- LCN-NUI power supply unit
- I-Port and mounting plate

Models:

LCN-GFPS

Size:	90 x 90 mm	
Colour:	white	LCN-GFPSW
	black	LCN-GFPSB

Note:
Attention: connect with power supply switched off! The cable to the bus module can be connected optionally up to 20 meters by using the LCN-IV. At large establishments with many users, we recommend to use a seperate module for controlling the LCN-GFPS, so that enough band width is available for synchronising biometrical data on the peripheries. For detailled information, please refer to the installation guide.

LCN-GFPS

Fingerprint sensor in GT design

- **As part of a comprehensive access control**
- **Produces transponder codes from a fingerprints**

Technical Data

Connection

Power supply:	over the I-Port (LCN-NUI)
LCN connection:	on the I-Port of an LCN bus module with firmware 190512... (May 2015) or later, for bidirectional communication

Function

sensor:	fingerprint scanner for max. 999 fingers with living finger recognition
LED´s:	4 LED´s for showing the sensor status, 16 white corona® LEDs controllable over the command LED GT-brightness in 10 steps

General details:

Operating temperature:	-10 to 40 °C
Humidity:	max. 80% rel., non condensing
Environmental conditions:	stationary installation according to VDE 632, VDE637
Degree of protection:	IP 20

Dimensions:

LCN-GFPS (H x W xD): 90 x 90 x 16.9 mm

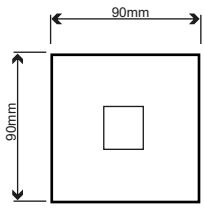

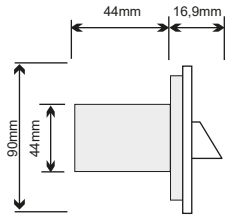

Circuit diagram

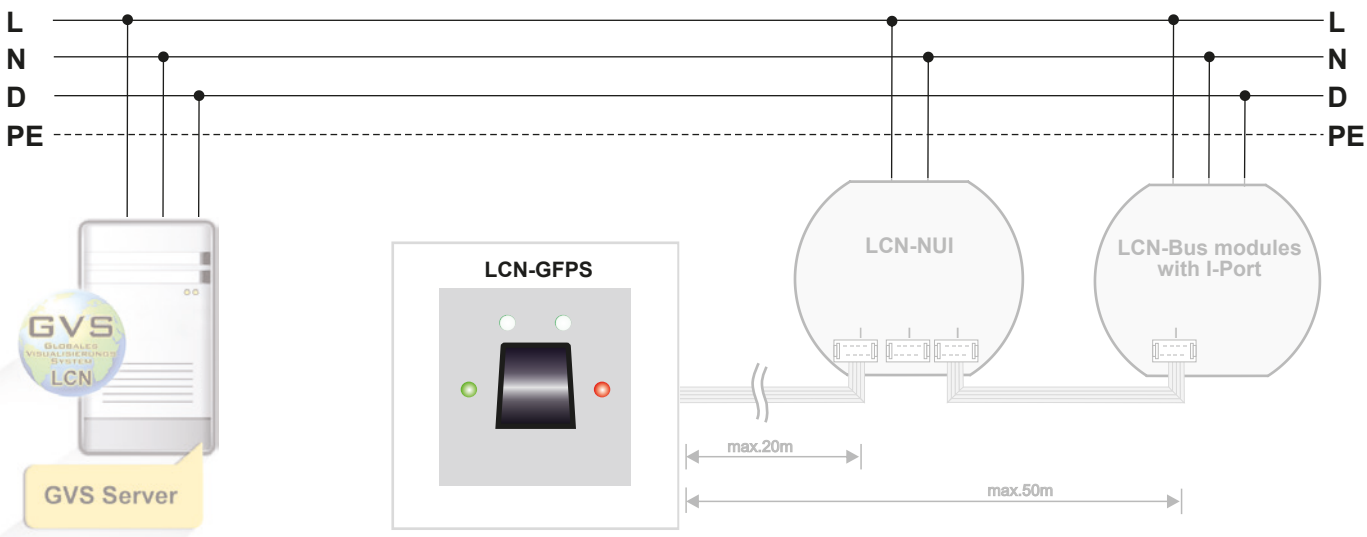

LCN | Outputs

LCN-R1U

Single relay 16 A for flush mounting

The LCN-R1U is a relay without own processor for flush wall mounting with a potential free contact for connecting to an LCN-UPP, LCN-UPU or LCN-UPS.Usage on every LCN module with a T-Port connection is possible.

Description

With this relay module, the user is provided with an additional switch contact for each LCN-UPP / LCN-UPU. This can be used especially for electrical socket switching or for regulating heater control valves. As well as this, two of the LCN-UPP / LCN-UPU electronic outputs still remain available for use.

Hardware

- One switch contact 230 Volt, 16 Ampere (AC1)
- Cable with plug for T-Port connection to intelligent bus modules such as the LCN-UPP or LCN-UPS
- T-Port socket for further connection of T-Port peripheries
- Status LED

Note:
The relay contact of the LCN-R1U has been optimised for high starting currents (AgSnO2). A minimum load of 20 V/100 mA is required to prevent oxidisation of the contacts. To run the LCN-R1U the signalling function of the connected intelligent bus-module has to be turned off. For more detailed information please refer to installation guide.

LCN-R1U

Single relay 16 A for flush-mounting

- **One switch-over contact 230 Volts, 16 amps (AC1)**
- **For operating on the T-Port**

Technical Data

Connection:

Power supply:	230 VAC ±15%, 50/60 Hz optional 110 VAC
Power consumption:	< 0.35 W
Supply Connection:	strand wire 0.75 mm² (with insulated ferrules)
Terminals:	screwless
Wire type:	max.16 A, solid or strand wire max. 2.5 mm² or with insulated ferrules max.1.5 mm²

Relay:

Nominal voltage:	16 A (AC1) resistive load
Max.starting current:	70 A
Operation current:	100 mA -16 A
Contact voltage:	> 20 V
Contact material:	AgSnO2

Ports:

Ports:	T-Port

General details:

Operating temperature:	-10 to 40 °C
Humidity:	max. 80% rel., non condensing
Environmental conditions:	Stationary installation according to VDE 632,VDE 637,
Degree of protection:	IP 20

Dimensions:

LCN-R1U (Ø x H):	50 x 20 mm
Installation:	decentralized installation in deep flush-mounted box

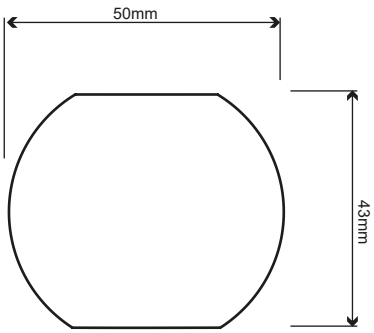

Circuit diagram

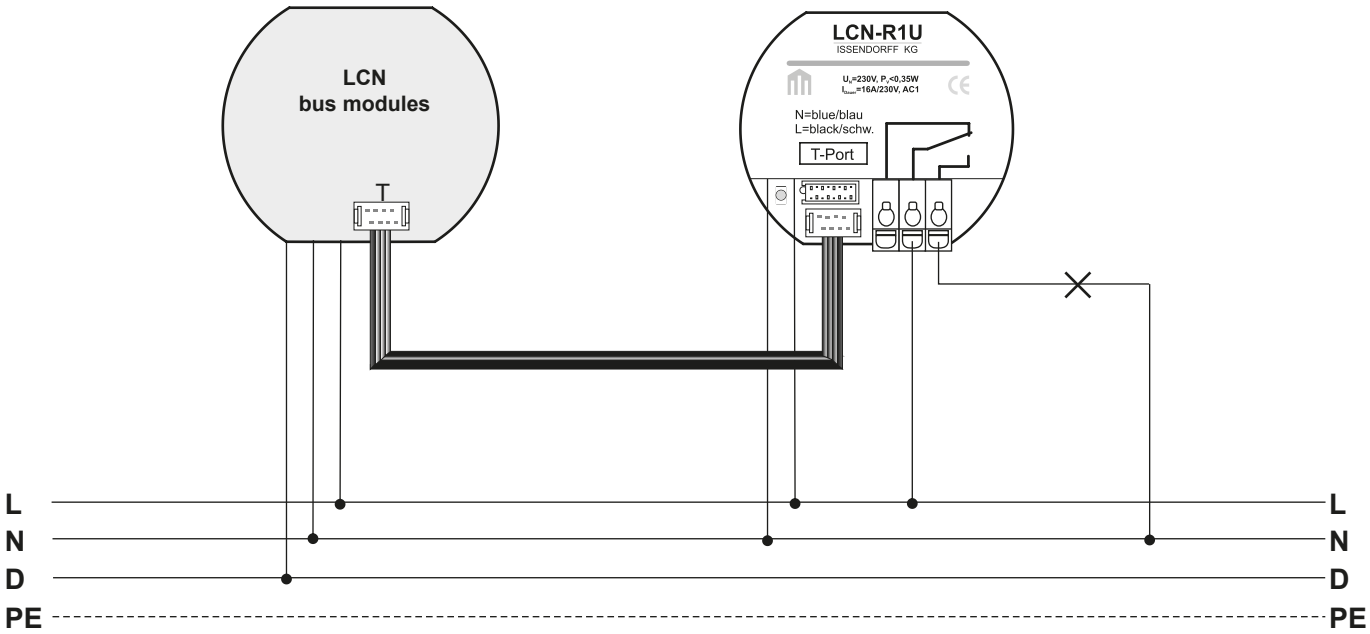

LCN-R2U

Double relay 8 A for flush-mounting

The LCN-R2U is a double isolation relay to connect to LCN-UPP / LCN-UPU modules. It has two independently controllable 8 Ampere normally open contacts. The excitation voltage is 230 VAC. Internally, the device runs with DC ensuring silent operation.

Application

In order to galvanically separate inductive or capacitive loads from the flush-mounted module, the relay module LCN-R2U is simply placed between module and device. It is especially suitable to control motors for shutters and blinds.

The LCN-R2U can be used independently of the LCN system as a hum-free double relay.

Hardware

- Two normally closed switch contacts 8 A, AC1
- Status LED

Note:
The relay contacts of the LCN-R2U are optimized for high starting currents (AgSnO2). A minimum load 12 V/100 mA is required to prevent oxidisation of the contacts.

LCN-R2U

Double relay 8 A for flush-mounting

- **Two closer contacts, 8 amps (AC1)**
- **For operating on the LCN-UPP / LCN-UPU module**

Technical Data

Connection:

Power supply:	230 VAC ±15%, 50/60 Hz optional 110 VAC
Input power:	< 0.4 W
Terminals:	screwless
Wire type:	max.16 A, solid or strand wire max. 2.5 mm² or with insulated ferrules max.1.5 mm²)

Relay:

Nominal current:	8 A (AC1) resistive load
Max.starting current:	70 A
Operation current:	100 mA-8 A
Contact voltage:	> 20 V
Contact material:	$AgSnO_2$

General details:

Operating temperature:	-10 to 40 °C
Humidity:	max. 80% rel., non condensing
Environmental conditions:	Stationary installation according to VDE 632,VDE 637,
Degree of protection:	IP 20

Dimensions:

LCN-R2U (Ø x H):	50 x 20 mm
Installation:	decentralized installation in deep flush-mounted box

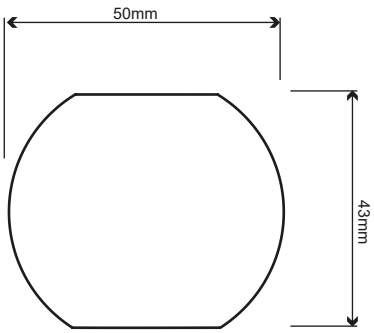

Circuit diagram

(Example: Control of a motor for shutters)

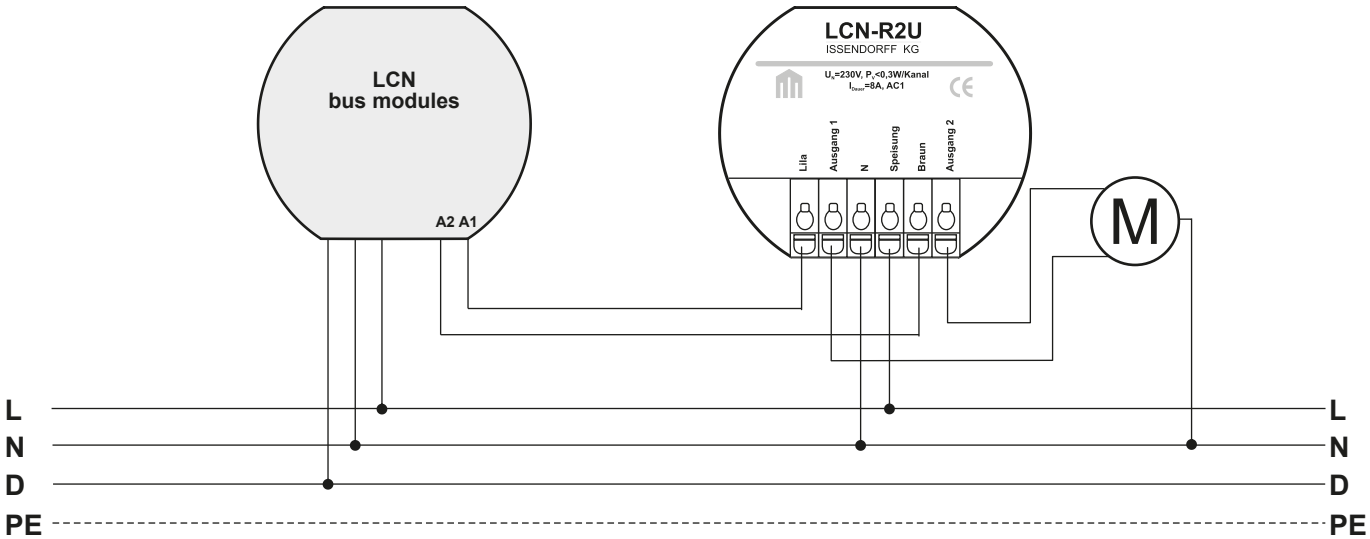

LCN-FI1

Suppressing filter for flush mounting

The LCN-FI1 serves as a suppression filter when using the LCN-UPP / LCN-UPU. For each output it offers its own filter segment and a load capacity of 300 VA. Furthermore, it protects the outputs from voltage peaks.

Application

The LCN-FI1 filters out unwanted harmonics while dimming within the requirements of the CE norm. It also protects against voltage peaks caused by inductive loads, e. g. from fluorescent lamps with electronic ballasts.

Hardware

- Screwless terminals

Note:
The LCN-FI1 needs only be used with the LCN-UPP / LCN-UPU module. The DIN rail mounted bus modules already have an integrated filter. When using motors, the relay LCN-R2U is recommended.For more detailed information please refer to the installation guide.

LCN-FI1

Suppressing filter for flush mounting

• **For operating on the LCN-UPP / LCN-UPU module**

Technical Data

Connection:

Power supply:	110 to 230 VAC ±15%, 50/60 Hz
Input power:	< 0.4 W
Terminals:	screwless
Wire type:	max.16 A, solid or strand wire max. 2.5 mm² or with insulated ferrules max.1.5 mm²
Fuse:	3.15 AF external

General details:

Operating temperature:	-10 to 40 °C
Humidity:	max. 80% rel., non condensing
Environmental conditions:	Stationary installation according to VDE 632,VDE 637,
Degree of protection:	IP 20

Dimensions:

LCN-FI1 (Ø x H):	50 x 20 mm
Installation:	decentralized installation in deep flush-mounted box

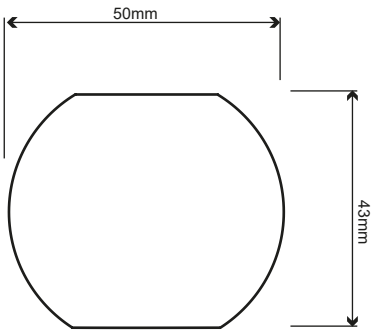

Circuit diagram

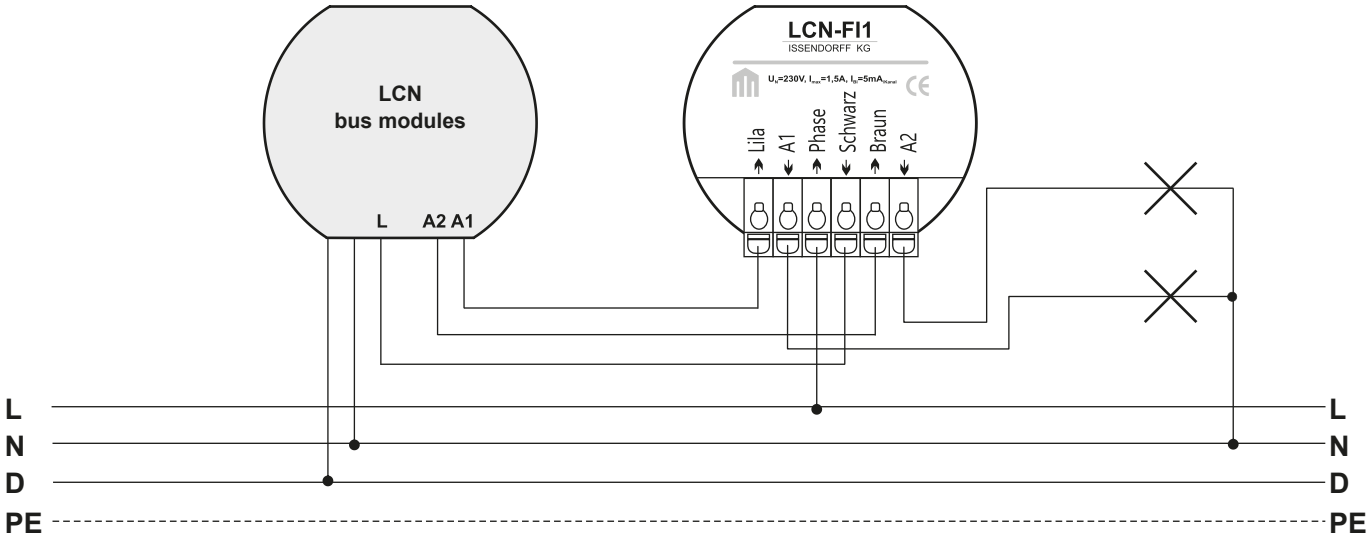

LCN-DDR

DSI/DALI controller for flush-mounting

The LCN-DDR is an interface for controlling digital electronic ballasts with DALI or DSI protocols. It is used in conjunction with the LCN-UPP, LCN-UPU or the LCN-UPS modules.

Application

The LCN-DDR couples flush-mounted modules with DSI or DALI electronic ballasts for dimming fluorescent lamps.

Hardware

- Two DSI outputs or one DALI output
- Cable for T-Port connection to LCN-UPP, LCN-UPS, LCN-UPU, LCN-UMR
- T-Port socket for further connection of T-Port peripheries

Note:
The LCN-DDR control wire is related to Neutral! When using with bus modules LCN-UPS or LCN-UPU the DSI ballasts must be operated on continuous phase as the outputs A1 and A2 are not present on these bus modules. This is however in accordance with the manufacturer´s recommendations. Electronic ballasts differ from manufacturer to manufacturer: for address allocation use the control unit of the respective ballast manufacturer. Ballasts from TRIDONIC can only be used in DSI mode. Parallel operation with KNX keypads is only possible with LCN modules produced after 08/2004. For more detailed information please refer to the installation guide.

LCN-DDR

DSI/DALI controller for flush-mounting

- • For dígital DALI or DSI control gears
- • Two DSI channels, one DALI output
- • For operating on the T-Port
- •

Technical Data

Connection:

Power supply:	230 VAC ±15%, 50/60 Hz optional 110 VAC
Input power:	< 1 W
Connection power side:	strand wire 0.75 mm² with insulated ferrules
Terminals:	screwless, max. 16 A
Wire type:	max.16 A, solid or strand wire max. 2.5 mm² or with insulated ferrules max.1.5 mm²)
DSI-Load:	10 ballasts per output (2 DSI outputs)
DALI-Load:	16 for DALI ballasts (1 DALI output)

General details:

Operating temperature:	-10 to 40 °C
Humidity:	max. 80% rel., non condensing
Environmental conditions:	Stationary installation according to VDE 632,VDE 637,
Degree of protection:	IP 20

Dimensions:

LCN-DDR (Ø x H):	50 x 20 mm
Installation:	decentralized installation in deep flush-mounted box

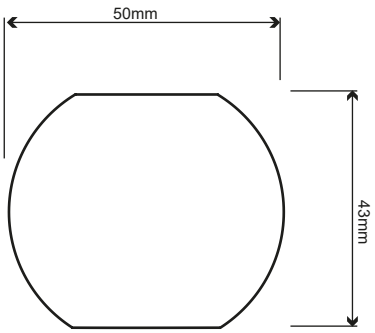

Circuit diagram

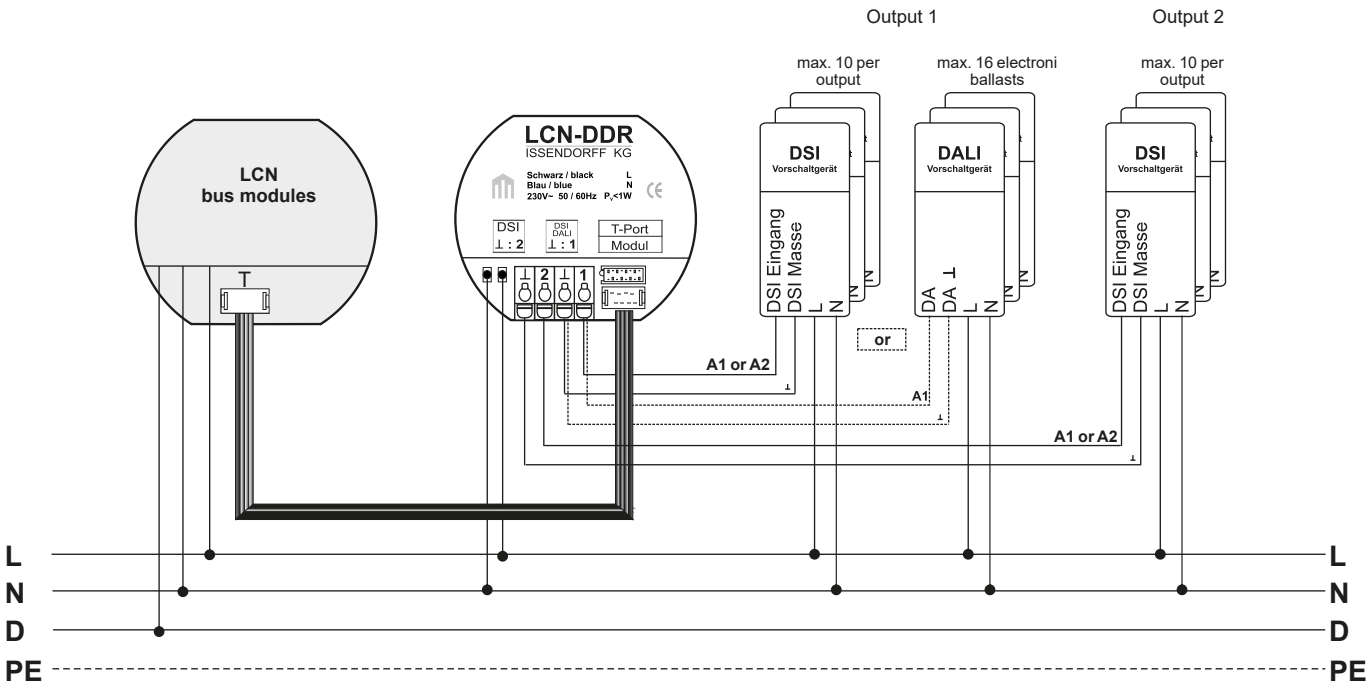

LCN-R6H

Relay module 6 x 16 A outputs for DIN rail mounting

The LCN-R6H is a 6 relay block for the LCN Bus system. It can be connected to an intelligent bus module such as LCN-SH, LCN-HU , LCN-SHU, LCN-SHD or LCN-LD The potential free 16A contacts are optimized for high starting currents.

Description:

The LCN relay block is used to control up to eight independent circuits/devices or up to four independently controlled motor drives. A combination of the above is possible.

Hardware equipment:

- 6 load relays and potential free switch contacts for load switching at 250V/16A AC1
- 3600VA switching capacity (each contact)
- Cable with plug for P-Port connection to the intelligent bus module
- Plug- in relays for extending to an extra LCN-R2H

Note:
The LCN-R6H's relay contacts are optimised for high starting currents (AgSnO). A minimum load of 20V 100mA is needed to prevent oxidisation of the contacts. When planning the contact loads pay special attention to the starting and reactive currents. For media applications gold contact relays are available as an option.For more detailed information please refer to the installation guide.

LCN-R6H

Relay module 6 x 16 A outputs for DIN rail mounting

- **Six load relays with potential free switch-over contacts at 250 Volts, 16 amps, AC1**
- **3600 VA switching capacity on each relay contact;**

Technical Data

Connection:

Power supply:	230 VAC ±15%, 50/60 Hz optional 110 VAC
Input power	< 2 W
Terminals:	Screwless, max. 16 A
Wire type:	solid or strand wire max. 2.5 mm² or with insulated ferrules 1.5mm²

Relay:

Nominal current:	16 A/AC1(resistive load)
Max. starting current:	70 A
Operation power:	100 mA-16 A
Contact voltage:	> 20 V
Contact material:	$AgSnO_2$

General details:

Operating temperature:	-10 to 40 °C
Humidity:	Max. 80% rel., no condensing
Environmental conditions:	Stationary installation according to VDE 632,VDE 637
Degree of protection:	IP 20

Dimensions:

LCN-R6H (W x H x D):	85 x 92 x 66,5 mm 61,5 mm via DIN rail
Space requirement:	5 DU
Installaton:	on 35 mm mounting rail (DIN 50022))

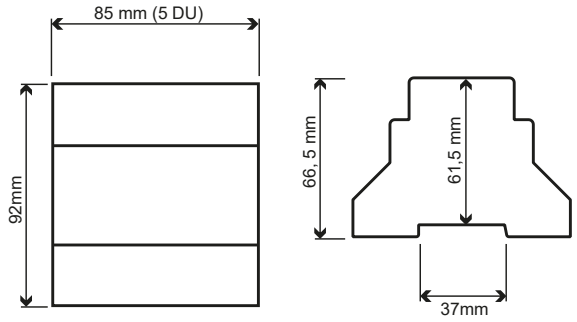

Circuit diagram

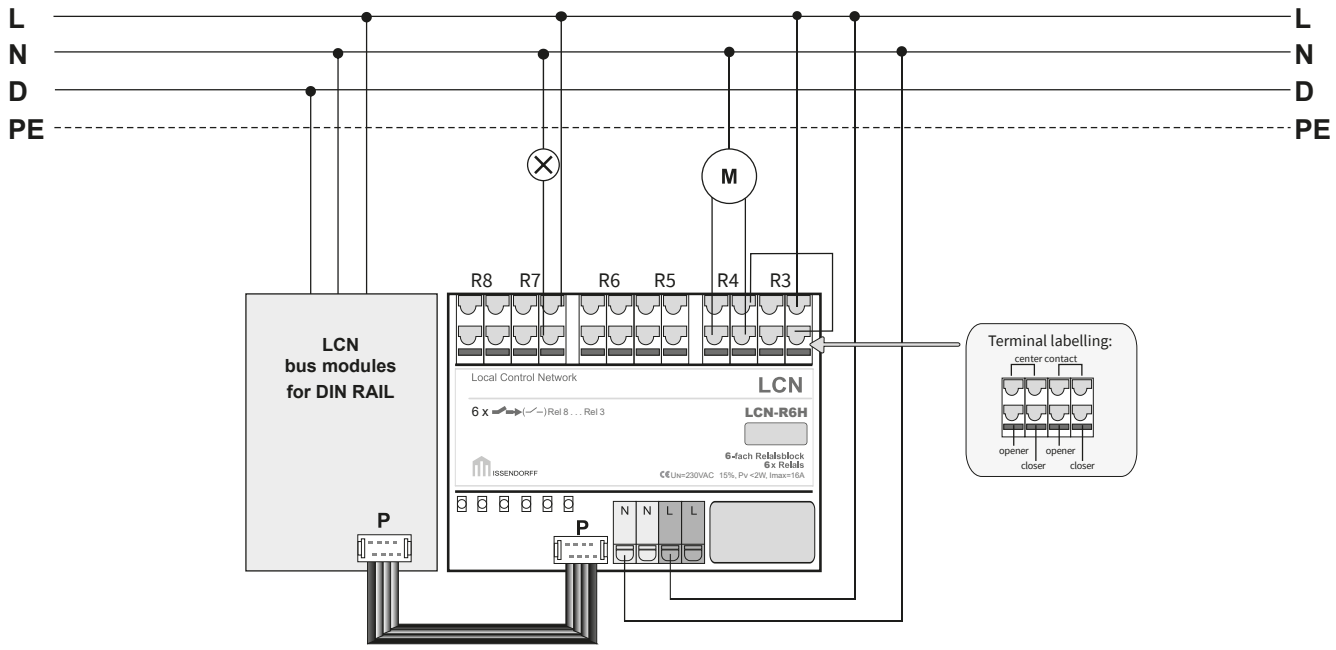

LCN-R4M2H

Relay module 4 x 2 motor outputs for DIN rail mounting

The LCN-R4M2H is a relay block for controlling up to eight motors or 4 x two motors in parallel for the LCN Bus system. It is for connecting to an intelligent bus module such as the LCN-SH, LCN-HU or LCN-LD. The contacts are pre-wired and connected to terminals, making it simple to connect and control 230 V motors.

Application

The LCN-R4M2H relay block is used to control up to eight 230 V motor drives enabling control of four motor pairs in parallel. It is designed for use with solar shading systems such as shutter control. Used in conjunction with current sensors like LCN-BS4, it enables accurate position control.

Hardware

- Eight relays for load switching with potential free contacts N.O and N.C pre-wired for use with motors at 250 V/8 A, AC 1
- 1800 VA switching capacity; max. 3600 VA circuit power
- Cable with plug for P-Port connection to the intelligent bus module
- Plug-in relays

Note:
A minimum load of 5 V/10 mA is needed to prevent oxidisation of the contacts. This is less than that of other relay blocks due to the contact material (AgNi 90/10). This however renders the relay block less resistant to current surges than other relay blocks. When planning the contact loads pay special attention to the starting and reactive currents.

For more detailed information please refer to the installation guide.

LCN-R4M2H

Relay module 4 x 2 motor outputs for DIN rail mounting

- **For controlling up to eight motors (4x2)**
- **1800 VA switching capacity on each relay contact; a maximum of 3600 VA together**
- **For operating on the P-Port**

Technical Data

Connection:

Power supply:	230 VAC ±15%, 50/60 Hz optional 110 VAC
Input power	< 2 W
Terminals:	Screwless, max. 16 A
Wire type:	solid or strand wire max. 2.5 mm² or with insulated ferrules 1,5 mm²

Relays:

Nominal current:	8 A/AC1(resistive load)
Max. starting current:	30 A
Operation current:	10 mA-8 A per motor (max. 16 A total/all motors)
Rec. contact voltage:	> 5 V
Contact material:	AgNi 90/10

General details:

Operating temperature:	-10 to 40 °C
Humidity:	Max. 80% rel., no condensing
Environmental conditions:	Stationary installation according to VDE 632,VDE 637
Degree of protection:	IP 20

Dimensions:

LCN-R4M2H (L x H x D):	85 x 92 x 66,5 mm 61,5 mm via DIN rail
Space requirement:	5 DU
Installaton:	on 35 mm mounting rail (DIN 50022)

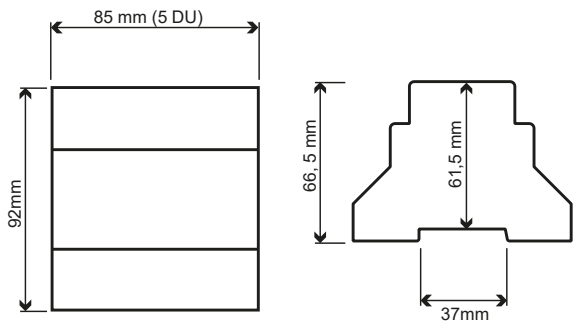

Circuit diagram

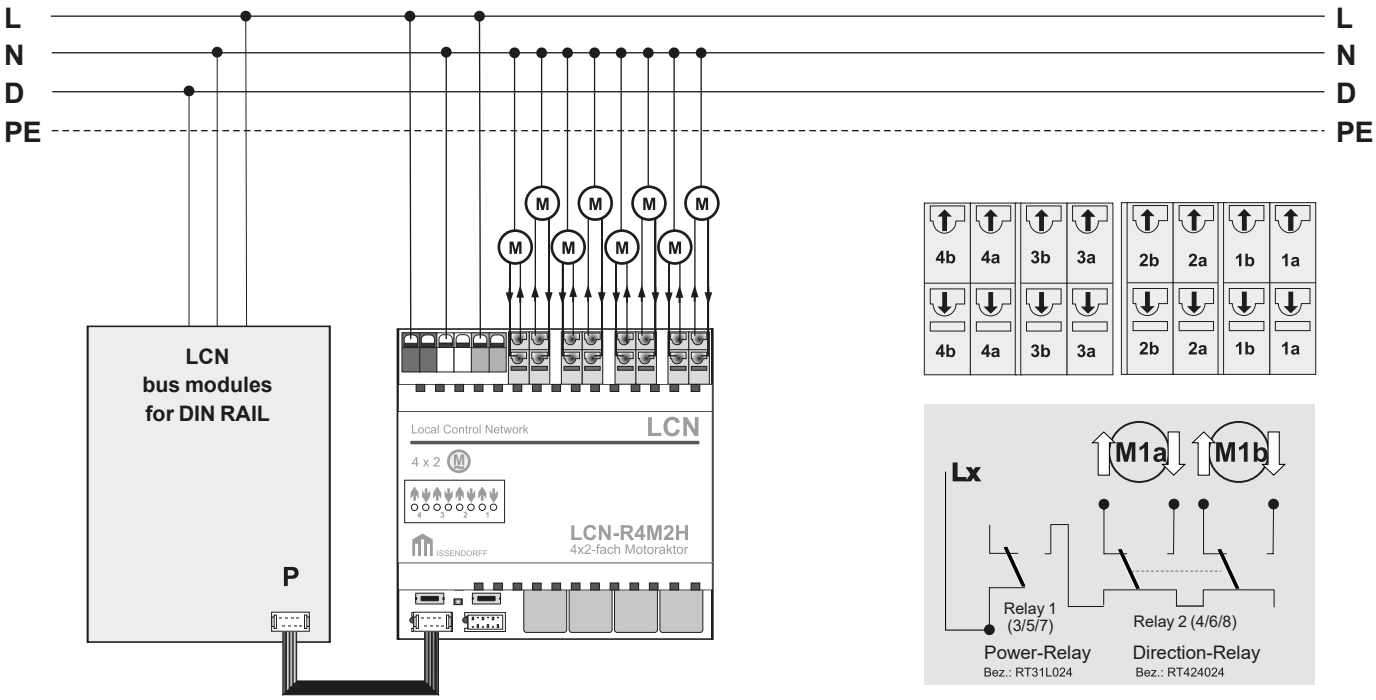

LCN-R2H

Relay module 2 x 16 A outputs for DIN rail mounting

The LCN-R2H provides two 230 V/16 A contact switching relays. It can be extended with a second LCN-R2H. The LCN-R2H is for connecting to an intelligent bus module such as the LCN-SH, LCN-SHS, LCN-HU or LCN-LD.

Application

The LCN relay block is used to control two independent circuits/devices or for a single motor drive.

Hardware

- Two relays for load switching at 250 V/16 A AC1
- 3600 VA switching capacity each contact
- Cable with plug for the P-Port connection to the intelligent bus module
- P-Port socket for connection to an additional LCN-R2H
- Plug-in relays

Note:
The relay contacts of the LCN-R2H are optimized for high starting currents (AgSnO). A minimum load of 20V 100mA is needed to prevent oxidisation of the contacts. When planning the contact loads pay special attention to the starting and reactive currents. For use with media applications, relays with gold contacts are available as an option.

For more detailed information please refer to the installation guide.

LCN-R2H

Relay module 2 x 16 A outputs for DIN rail mounting

- **Two load relays with potential free switch-over contacts at 250 Volts, 16 amps, AC1**
- **3600 VA switching capacity on each relay contact;**
- **For operating on the P-Port**

Technical Data

Connection:

Power supply:	230 VAC ±15%, 50/60 Hz optional 110 VAC
Input power	< 2 W
Terminals:	Screwless, max. 16 A
Wire type:	solid or strand wire max. 2.5 mm² or with insulated ferrules 1.5mm²

Relay:

Nominal current:	16 A/AC1(resistive load)
Max. starting current:	70 A
Operation power:	100 mA-16 A
Contact voltage:	> 20 V
Contact material:	$AgSnO_2$

General details:

Operating temperature:	-10 to 40 °C
Humidity:	Max. 80% rel., no condensing
Environmental conditions:	Stationary installation according to VDE 632,VDE 637
Degree of protection:	IP 20

Dimensions:

LCN-R2H (L x H x D):	37 x 92 x 66,5 mm 61,5 mm via DIN rail
Space requirement:	2 DU
Installation:	on 35 mm mounting rail (DIN 50022)

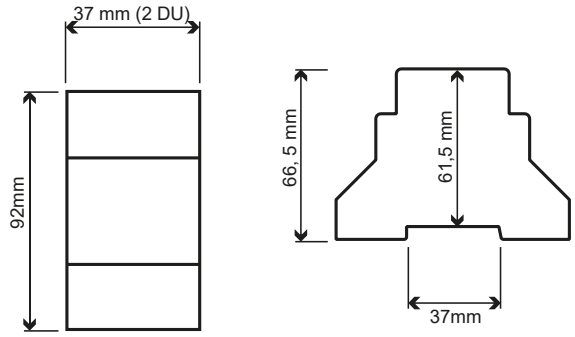

Circuit diagram

Here an example: connecting a power unit

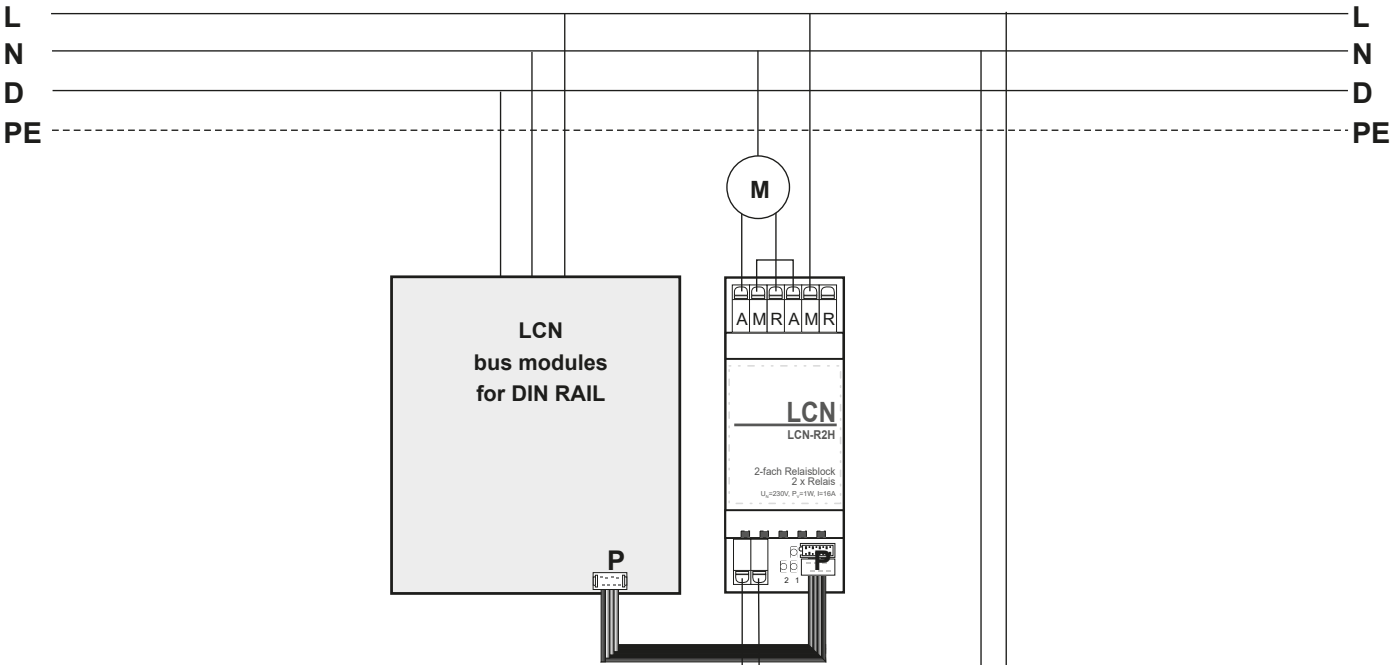

LCN-A4H

Heating actuator with four outputs each 100mA for DIN rail mounting

The LCN-A4H is an actuator with four outputs for controlling 230V actuators, e.g. LCN-AVN. The LCN-A4H is mounted on the top-hat rail and plugged into the P-connection of an intelligent bus module LCN-SHS/ -SH/-SHU/-SHD/ or LCN-HU with a ribbon cable of approx. 25 cm length.

Application

The outputs are designed as semiconductor switches (switching in zero crossing). Therefore, the coils of contactors can also be ideally controlled with the LCN-A4H. The LCN-A4H switches absolutely noiseless and wear-free. With a second LCN-A4H an extension to a total of eight outputs is possible. The second LCN-A4H is plugged into the still free P-connector socket of the first one. A combination of one LCN-A4H and one or two LCN-R2H is also possible. All four outputs can be controlled individually via relay commands.

Hardware

- Two P-connection cables
- 25 cm ribbon cable

LCN-A4H

Heating actuator with four outputs each 100mA for DIN rail mounting

- **For control of 230V actuators**

Technical Data

Connection:

Power supply:	via P-connection
Switching voltage:	230 VAC +/-15%.
Terminals:	screwless, solid max. 2,5mm² or stranded wire with wire end ferrule max. 1,5mm² loop-through current max. 16A
LCN connection:	P-connection cable length 250mm (pluggable)
Outputs:	max. 100mA per output, zero voltage switch

General details:

Operating temperature:	-10 to 40 °C
Humidity:	Max. 80% rel., no condensing
Environmental conditions:	Stationary installation according to VDE 632,VDE 637
Degree of protection:	IP 20

Dimensions:

LCN-A4H (L x H x D):	37 x 92 x 66,5 mm 61,5 mm via DIN rail
Space requirement:	2 DU
Installation:	on 35 mm mounting rail (DIN 50022)

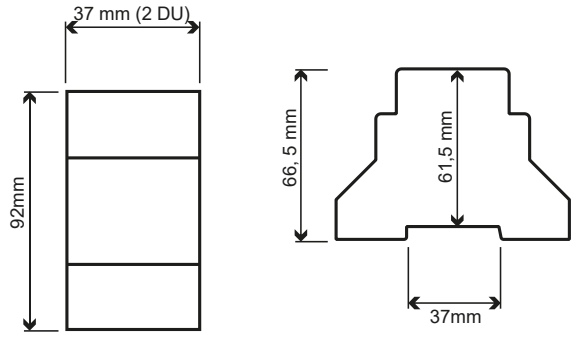

Circuit diagram

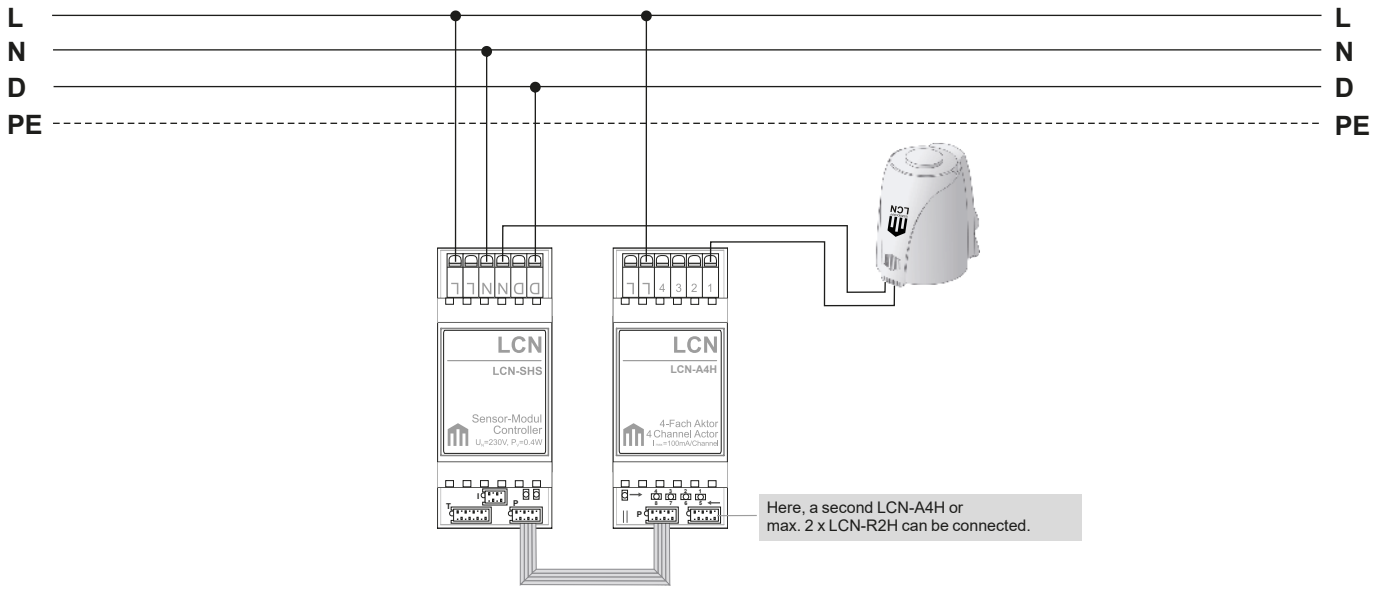

LCN-AO1R

Analogue output converter 230 V/0-10 V for flush-mounting

The LCN-AO1R transforms the dimmed phase of the LCN-UPP, LCN-UPU immediately into an analogue 0-10 V (1-10V) control signal. In addition it provides a 230 V output for supplying electrical ballasts.

Application

The LCN-AO1R is mainly used for for controlling dimmable electrical ballasts with a 0-10 V signal. Additionally, the LCN-AO1R has a 230 V relay output which always activates when the 0-10 V output is not 0.

The LCN-AO1R can control devices with a 0-10 V signal such as frequency converters, actuators for ventilation dampers or heating valve actuators.

Hardware

- Input for dimmed phase
- One output 0-10 V
- One Output 230 V/8 A
- Status display

Note:
The LCN-AO1R only works with the LCN-UPP. It can not be used on the LCN-SH because of its interference suppression filter.

For more detailed information please refer to the installation guide.

LCN-AO1R

Analogue output converter 230 V/0-10 V for flush-mounting

- **For control of dimmable ballasts**
- **Input for dimmed phase**
- **One output 0-10 V**
- **One switched output 230 V/8 A**
- **Status display**

Technical Data

Connection:

Power supply:	230 VAC ±15%, 50/60 Hz optional 110 VAC
Input power	< 0.8 W
Connection power side:	strand wires 0.75 mm² with insulated ferrules
Terminals:	screwless,
Wire type:	solid or starnd wire max. 2.5 mm² or with insulated ferrules 1.5 mm²
Conductor typ 0-10 V:	max. 0.8 mm

Output:

Relay output:	Relay 230 V, max. 8 A
0-10V output:	Source current: max. 1.5 mA (aktive) Load current: max. 40 mA around 40 ballasts with query current under 1 mA/elec. ballasts. The 0-10 V Output is on N potential.

General details:

Operating temperature:	-10 to 40 °C
Humidity:	Max. 80% rel., no condensing
Environmental conditions:	Stationary installation according to VDE 632,VDE 637
Degree of protection:	IP 20

Dimensions:

LCN-AO1R (Ø x H):	50 x 20 mm
Installation:	decentralized installation in deep flush-mounted box

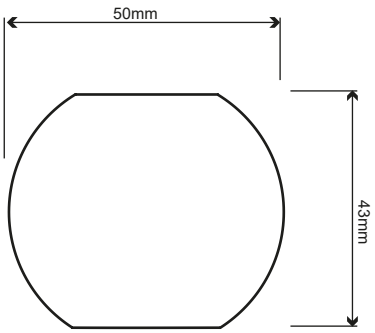

Circuit diagram

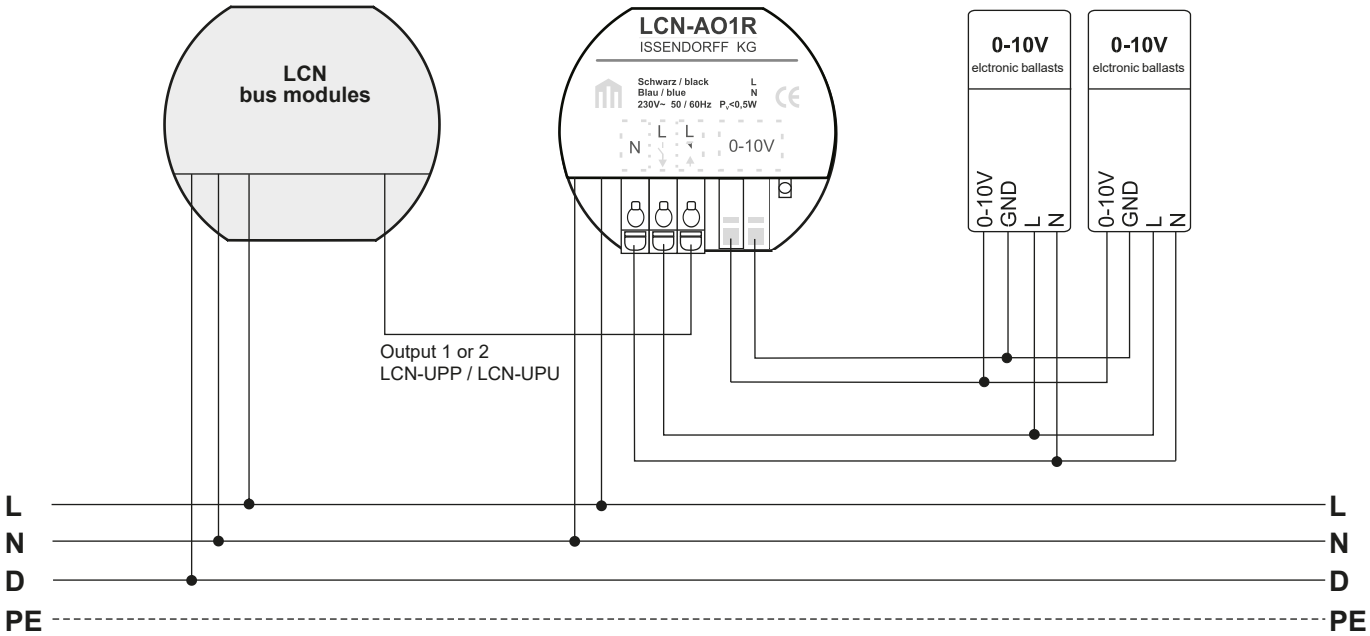

LCN-DMXH

DMX 512 master/slave controller

The LCN-DMXH controller is used to control four DMX channels, e.g. RGBW electronic ballasts. It must be connected to an intelligent bus module from firmware 1702 .. (Feb. 2013).

Application

The LCN module provides the brightness values of its four electronic outputs on the I-Port to the LCN-DMXH. The LCN-DMXH converts these values to the corresponding freely configurable DMX channels.

The LCN-DMXH can be looped into an existing DMX line via existing DMX output. The LCN-DMXH uses its four dimming values in four adjustable DMX addresses. It is also possible to connect up several LCN-DMXH in series to control 8, 12 or more channels.

Hardware

- LCN-DMXH
- I-Port cable

Note:
The following periphery should not be connected at the same time: LCN-GT4D/-GT10D. For more detailed information please refer to the installation guide.

LCN-DMXH

DMX 512 master/slave controller

Technical Data

Connection:

Power supply:	230 VAC ±15%, 50/60 Hz optional 110 VAC
Input power	3 W
Terminals:	screwless, max. 16 A
Wire type:	solid or strand wire max. 2.5 mm² or with insulated ferrules 1.5 mm²

Output:

Output voltage:	according to DMX 512A specification, polarized interface
Terminals/Conductor Type:	solid or strand 0.5-1.5 mm²
Number DMX participants:	Max. 32 total

General details:

Operating temperature:	-10 to 40 °C
Humidity:	Max. 80% rel., no condensing
Environmental conditions:	Stationary installation according to VDE 632,VDE 637
Degree of protection:	IP 20

Dimensions:

LCN-DMXH (L x H x D):	37 x 92 x 66,5 mm 61,5 mm via DIN rail
Space requirement:	2 DU
Installation:	on 35 mm mounting rail (DIN 50022)

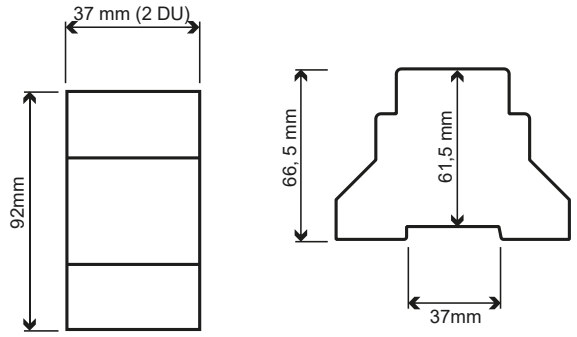

Circuit diagram

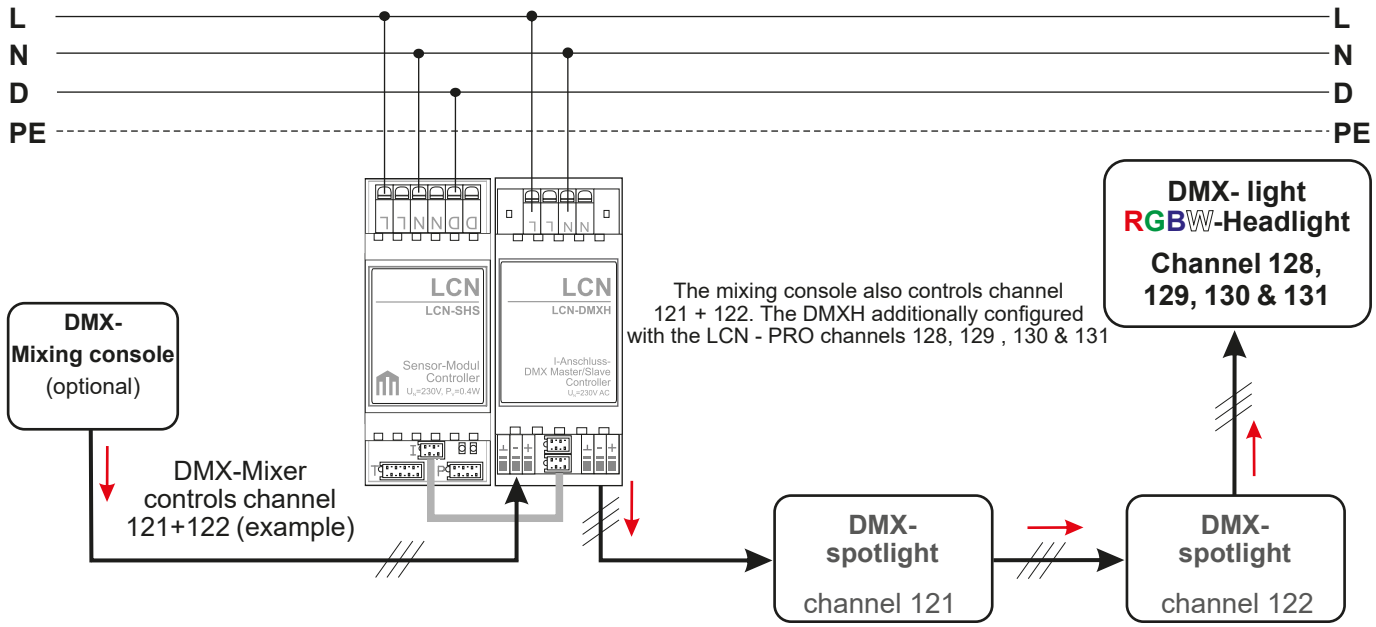

LCN-DIH

DALI controller for DIN rail mounting

The DALI controller LCN-DIH can address and control up to 64 DALIdevices The LCN-DIH also supports controlling Tunable White and RGB capable lights using a DALI Type 8 (DT8) accordig to DALIstandard IEC 62386-209.

It is mounted onto the DIN rail and can be used with LCN-Modules e. g. LCN-SHS from firmware 1B07... (July 2017).

Application

Mit With the LCN-DIH controller, DALI devices can be addressed via theI-Port of an LCN-SHS module. For this, LCN-PRO as from version 6.4.5 is required. There are two possible ways of controlling:

1.) Convenient control with LCN-commands and feedback (LCN to DALI)

The LCN-SHS directly transmits the brightness values of its four electronic outputs and the status of the eight relays. The gateway controls 4 + 8 DALI-groups. This happens conveniently with all LCNfunctions, e. g. 100 scene memories and true feedbacks. The different controllable groups are arbitrarily selectable.

2.) Control via DALI commands without feedback

Every DALI device can be addressed individually via DALI-commands ID/short address or via 16 group-assignments.

Hardware:

- LCN-DIH
- I-Port (galvanically isolated)

Note:
No periphery should be connected parallel at the same time on the I-Port! Only one LCN-DIH may be used on each I-Port!! When the relays for controlling DALI-groups are used, the connection of external relays is useless: The relays would be switched together with the DALI devices!

IMPORTANT: The LCN-DIH may only be used with the provided designated I-Port cable with galvanical isolation when connected to the LCN-module! Please find more detailled information in the installation guide.

Function Description:

LCN to DALI mode
In total, 12 groups can be assigned to the outputs and relays. The control only takes place once, when either output or relay status has changed. Note: If the DALI-devices should be controlled via DALI-commands, the outputs and relays must not be assigned to the used DALI-groups.

HSV to Yxy mode
In the HSV modes, only 3 channels of the LCN-control-module (e.g. LCN-SHS) are used. They are used as H(1), S(2) and V(3). A DALI-group can control DT8-devices in the Yxy mode. The DT8 group-address is only assigned to Output-1. Outputs 2-4 are not assigned to any DALI-group!
Assignment:
Output 1→ H Hue
Output 2→ S Colour Saturation
Output 3→ V Value (brightness level)
Output 4→ no function

HSV to RGBWAF mode
Like HSV to Yxy, only RGBWAF (Red, Green, Blue, White, Amber and Freecolour) control. The HSV-values are displayed on the DALI- bus in the format RGBWAF, e.g. for LUNATONE-devices.

RGBW to RGBWAF mode
In the mode “RGBW to RGBWAF” it is possible to control a DALIgroup of several DT8-devices in the RGBWAF mode. The DT8 group-addresses are only assigned to Output-1. Outputs 2-4 are not assigned to any DALI-group! The values of the 4 outputs for R, G, B and W are then converted to RGBWAF and transmitted to DALI.
Assignment:
Output 1→ R (red)
Output 2→ G (green)
Output 3→ B (blue)
Output 4→W (white)

Tunable White mode
In the mode “Tunable White” it is possible to control up to 2 groups of DT8-devices in the Tunable White mode.
Assignment:
Output 1 → Colour – warm white, cold white
Output 2 → Brightness
Output 3 → Colour – warm white, cold white
Output 4 → Brightness

LCN-DIH

DALI controller for DIN rail mounting

- **DALI controller (LCN-SHS needed!)**
- **Up to 64 electronic control gears (ECG´s) controllable**
- **For operating on the I-Port**

Technical Data

Connection:

Power supply:	230 VAC ±15%, 50/60 Hz optional 110 VAC
Input power	4W
Terminals:	Screwless, max. 16 A
Wire type:	solid or strand wire 0.5-1.5 mm²
LCN-Connection::	I-Port for bidirectional connection with galvanic isolation

Output:

Output voltage:	according to DALI specification, standard series IEC 62386 galvanically isolated

Terminals/Conductor

Type:	solid or strand 0.5-1.5 mm²
Number of DALI devices:	max. 64 total

General details:

Operating temperature:	-10°C bis +40°C
Humidity:	Max. 80% rel., non condensing
Environmental conditions::	Stationary installation according to VDE 632,VDE 637
Degree of protection:	IP20

Dimensions:

LCN-DMXH (L x H x D):	37 x 92 x 66,5 mm 61,5 mm via DIN rail
Space requirement:	2 DU
Installation:	on 35 mm mounting rail (DIN 50022)

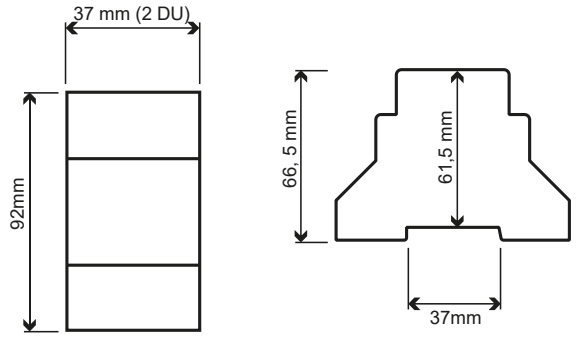

Installation:
The DALI-system is installed with usual installation material for mains voltage. Mains voltage and bus line may use the same cable. This corresponds to a five-wire cable (L, N, PE, DA, DA). Bus networking and star topology are supported. cable ring network is not allowed.

Line length up to

100 m	100-150 m	150-300 m

Wire cross-section

0.5 mm²	0.75 mm²	1.5 mm²

Circuit diagram

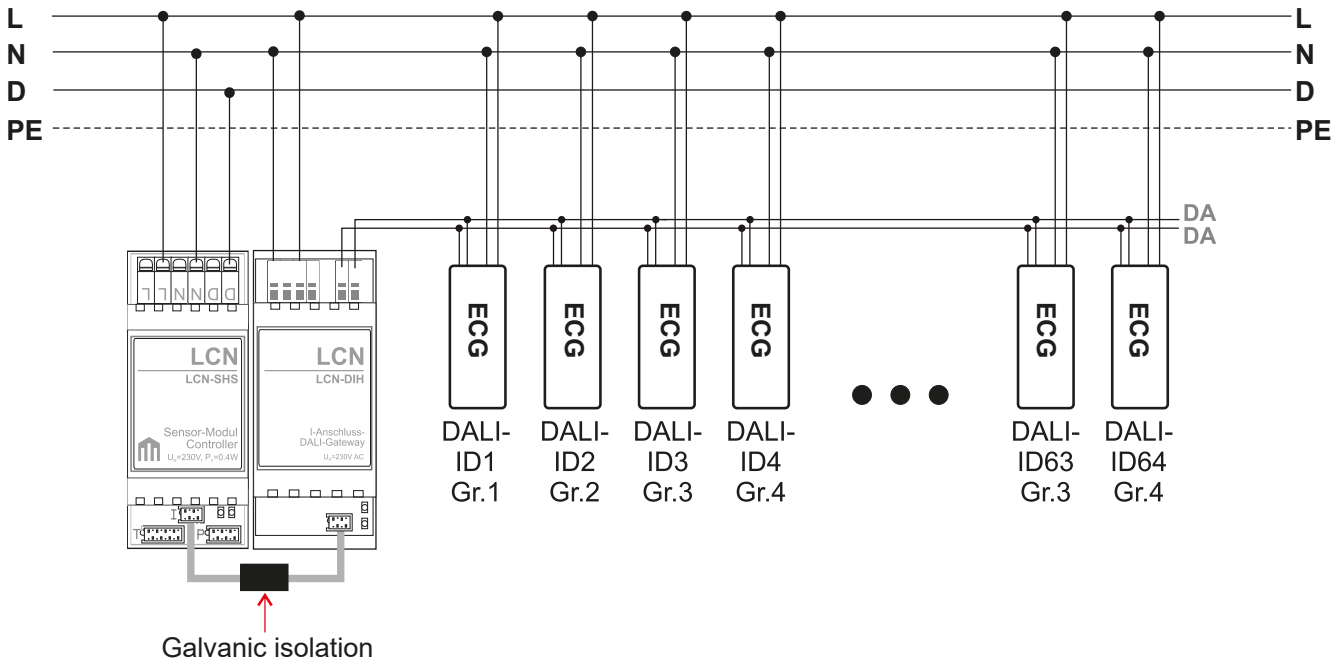

LCN-HL4+ | LCN-EL4+

LED four channel dimmer

The four channel dimmer is designed for a simple and flexible control of LEDs with constant voltage, usually an LED strip. It connects to an LCN module with firmware 170 212 (Feb. 2013) or later, on the I-Port.

For the mounting rail

Application fields

The LCN-HL4+/LCN-EL4+ can be connected to all intelligent LCN modules, preferably where the outputs are not being used for other purposes, e. g. to the LCN-SHS. The brightness values of the virtual electronic outputs 1-4, are transferred over the I-Port of the LCN-HL4+. The LCN-HL4+ converts these values into a PWM signal for LEDs.

The LCN-HL4+/LCN-EL4+ controls the LEDs according to the HSB and RGB colour pattern. Colour saturation, brightness and colour value can be controlled separately over the HSB colour pattern.

Hardware

- LCN-HL4+/LCN-EL4+
- I-Port cable

For screw mounting

Functionality:

RGB colour pattern (switch position 2)
The outputs are converted 1:1 to RGB. Output 1 controls red, output 2 controls green, output 3 controls blue and output 4 controls the white LED. It is not easy to adjust with a certain colour brightness: all four outputs must be dimmed in a constant mixing.

HSB colour pattern (switch position 1)
The desired settings are achieved by adjusting the colour (hue), the saturation (saturation) and the brightness (brightness) .

- LED four channel dimmers for LED RGB/RGBW
- LED control with HSB and RGB colour pattern
- Operation on the I-Port connection of the LCN modules

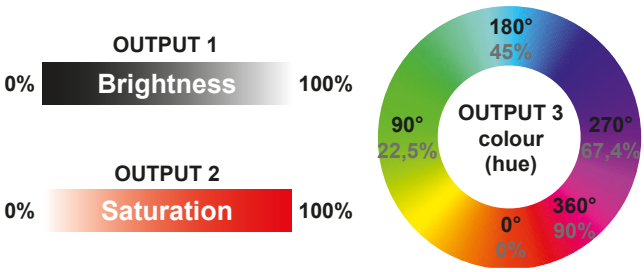

LCN-EL4+

The LCN-EL4+ has the same technical requirements as the LCN-HL4+ and is suitable for housing installation.

LCN-HL4+ | LCN-EL4+

LED four channel dimmer

- **LED four-channel dimmer for RGB or RGBW LED´s**
- **LED controls according to HSB and RGB colour**
- **For operating on the I-Port of the LCN modules**

Technical Data

Connection:

Power supply:	12-24 VDC power supply with overload protection
Power loss:	< 1 W
Output power:	480 W at 24 VDC
Terminals: (output):	screwless solid max. 2.5 mm² or strand wire with ferrules max. 1.5 mm²
LCN connection:	I-Port socket, galvanically separated from the load side, I-Port cable length 300 mm pluggable, over LCN-IVH extendable to max. 50 m. Max. 3 x LCN-HL4+ parallel on the I-Port possible.

Electronic outputs:

Output voltage:	constant voltage dimming via PWM signal 200 Hz
Output current Sum:	20 A
Output current per channel:	5 A,

General details:

Operating temperature:	-10 to 40 °C
Humidity:	Max. 80% rel., non condensing
Environmental conditions:	Stationary installation according to VDE 632,VDE 637
Degree of protection:	IP 20

Dimensions:

LCN-HL4+ (W x H x D):	37 x 92 x 66,5 mm 61,5 mm via DIN rail
Space requirement:	2 DU
Installation:	on 35 mm mounting rail (DIN 50022)

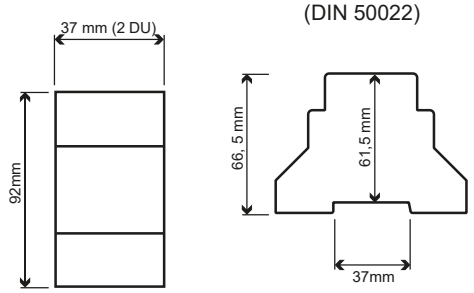

LCN-ESS (W x H x D):	35 x 102 x 23 mm
Installation:	Screw mounting

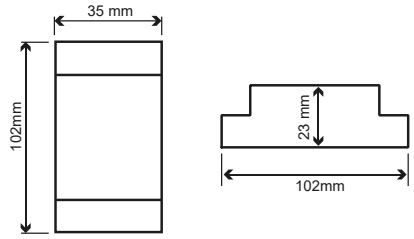

Circuit diagram

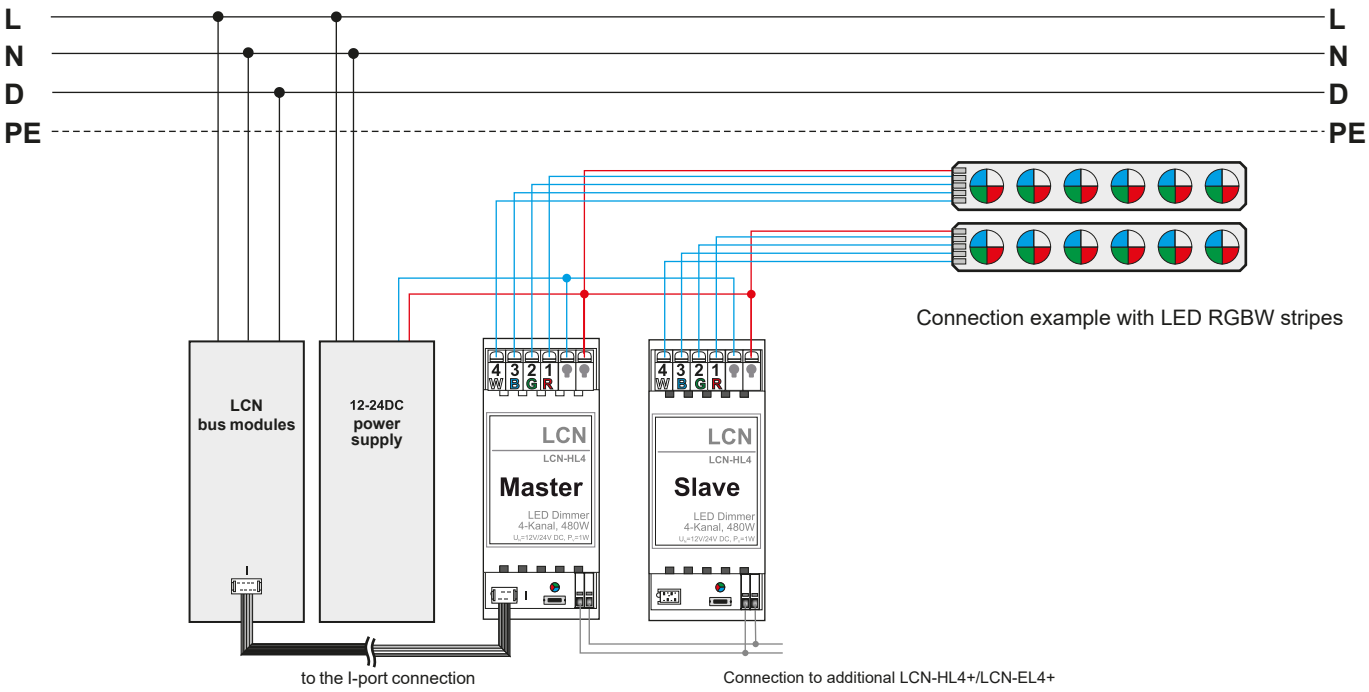

Connection example with LED RGBW stripes

LCN | Transponders

LCN-ZTK2

Transponder in bank card format

The LCN-ZTK2 is a transponder card with two integrated transponders for 125kHz and 13,56MHz.

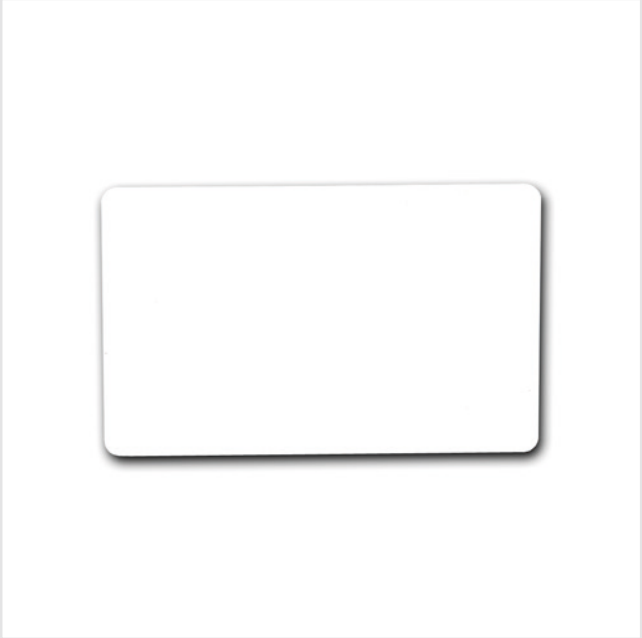

Application

The modules LCN-ULT and LCN-GT2T recognise the LCN-ZTK2 transponder and trigger freely programmable commands in the LCN system.

Note:
Each transponder chip in the card sends its own code.

Technical Data:

Card type:	Dual chip card
RFID Chip:	EM4102 (Universal) und MIFARE
Frequency:	125 kHz and 13,56 MHz
Material:	ABS
Operating temperature:	-45 to +70 °C
Storage temperature:	-50 to + 70 °C
Degree of protection:	IP 68

Circuit diagram

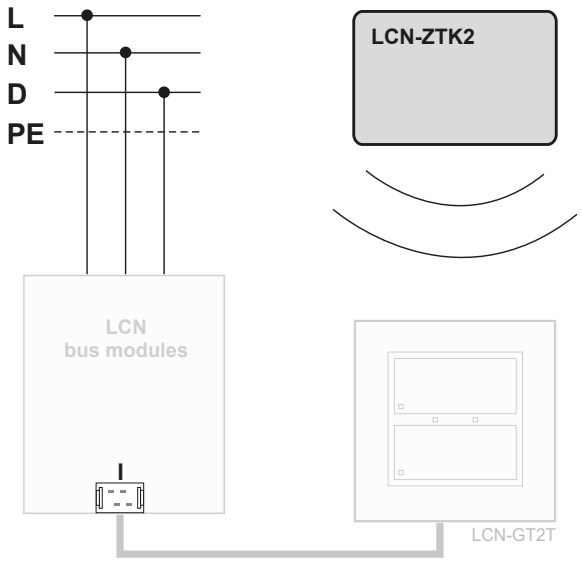

Dimensions

LCN-ZTK (L x W x D): 54 x 85 x 0,8 mm

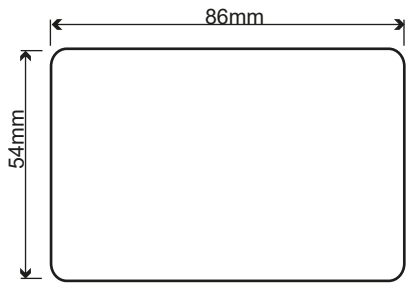

LCN-ZTS

Transponder as keyring

The LCN-ZTS is a keyring with an integrated transponder but has slightly less range than the transponder card version.

Application

The LCN-UT module recognises the LCN-ZTS transponder and triggers freely progammable commands in the LCN system.

Technical Data:

Card type:	TAG SAIL B
Compatible card system:	EM H 4002
Frequency:	125 kHz
Material:	ABS
Operating temperature:	-45 to 85 °C
Storage temperature:	-50°C to 70 °C
Degree of protection:	IP 68

Circuit diagram

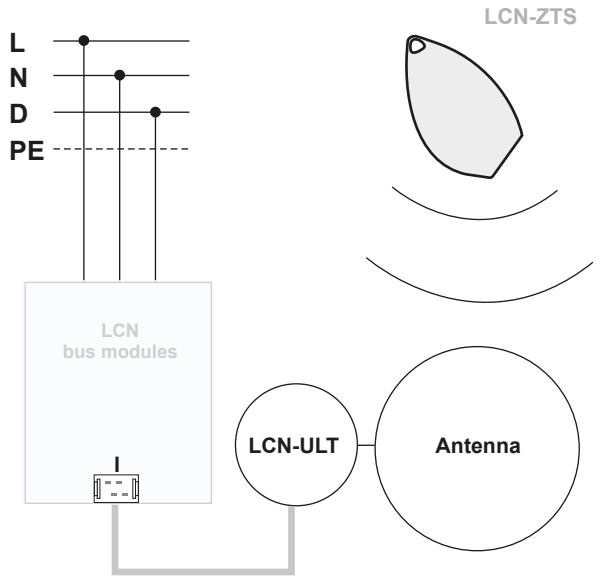

Dimensions

LCN-ZTS (L x W x H): 30 x 55 x 7 mm

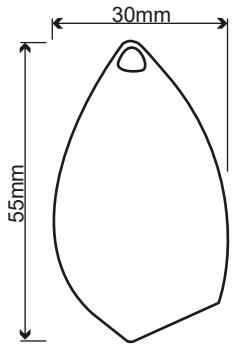

LCN-GT2T | LCN-GTS2T

Transponder reader with two capacitive sensor keys and Corona® light

The LCN-GT(S)2T is a transponder-reader with integrated infrared receiver, two capacitive sensor keys and Corona® light. It is mounted on a flush-mounted box using the supplied mounting plate and firmly anchored with a slide. The connection is made via the I-connection of any LCN module from version 17070A (July 2013).

Supported are 13.561 MHz NFC transponders of the type e. g. Mifare, Legic, etc. (ISO14443-A (type 1,2,4) and ISO15693 (type 5).

Description

The two capacitive sensor surfaces are arranged behind a 5 mm (3 mm) thick surface. A light touch of the surface is enough to trigger functions. A status LED integrated in each sensor surface provides information on the current status of any actuators or sensors in the building. Four states are possible.

The integrated NFC reader reads the cards when they are held directly in front of the glass panel. The code is transferred from the module to the LCN bus. The eight digit code can be processed directly in the module („small“ access control) or with the LCN-GVS („large“ access control) In addition, the LCN-GT(S)2T offers a Corona® light with white LEDs for wall illumination and elegant backlighting of the keys. This allows the LCN-GT(S)2T to be operated comfortably even in low ambient light. The individual inscriptions for the LCN-GT(S)2T are transferred to a foil or paper and placed behind the glass surface. The inlay can be recreated at any time, so that changes in the key assignment are no problem.

Application fields

The LCN-GT(S)2T is designed for installation in dry interiors. It can be used for all switching, regulating and control tasks as well as for access control and time recording in the LCN bus.

Hardware

- LCN-GT2T
- LCN-NUI
- Mounting panel
- Printing foil
- Installation guide

Note:
Attention: Plug in voltage-free!

Switch off the power supply LCN-NUI before plugging in the LCN-GT(S)2T. Please refer to the installation guide for detailed information.

Functionality:

The sensor surfaces of the LCN-GT2T react capacitively to contact with the glass surface. Depending on the duration of contact, a corresponding LCN control command Hit, Hold and Release is sent. The control command is transmitted to the I-Port of an LCN module via the mounting plate included in the scope of delivery.

The two status LEDs in the sensor surfaces are individually controlled via the I connection and configured via LCN-PRO as On, Off, Flashing or Flickering.

The transponder function is triggered via NFC standard (Mifare, Legic etc.) e. g. via transponder card, smartphone or other compatible peripherals.The integrated infrared receiver LCN-RR offers, e. g. via remote control, another possibility for remote triggering of functions.

Models:

LCN-GT2T
Size: 90 x 90 mm

Colour:	white	LCN-GT2TW
	black	LCN-GT2TB
	champagne	LCN-GT2TC

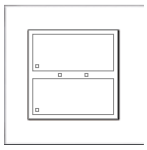

LCN-GTS2T
Size: 75 x 75 mm

Colour:	white	LCN-GTS2TW
	black	LCN-GTS2TB
	champagne	LCN-GTS2TC

LCN-GT2T | LCN-GTS2T

Transponder-reader with two capacitive sensor keys and Corona® light

- **Two capacitive sensor surfaces behind glass, two status LEDs**
- **NFC transponder-reader**
- **Integrated infrared receiver**
- **Incl. white Corona light wreath**
- **Incl. button backlighting**
- **Individual design of the keys with inlay**

Dimensions:

LCN-GT2T (L x H x D):	90 x 90 x 13 mm (5 mm glass thickness)
LCN-GTS2T: (bevelled edges)	75 x 75 x 11 mm (3 mm glass thickness)
Assembly:	By means of mounting plate on flush mounted box.
Frame:	Available in white, black and champagne, special customized colours.

LCN-GT2T

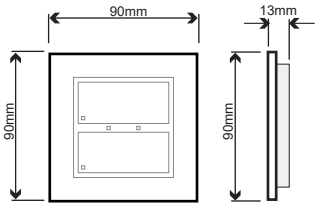

LCN-GTS2T

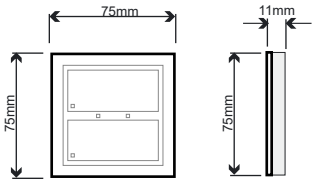

Technical data

Connection

Power supply:	via LCN module + LCN-NUI
LCN-Connection:	I-Port

Keys:

Type:	two capacitive sensor surfaces with status LED behind glass
Function:	Short, Hold, Release
Inlay:	via changeable foil

LEDs:

Status-LEDs:	2 red LEDs for displaying LCN status messages, Function: Off/Flashing/ Flickering/On

Keypad background LEDs

Corona® LEDs:	White Corona® LEDs can be controlled via the „LED bright ness“ command
Reading distance:	0.2-7 cm (depending on transponder type and installed location of the antenna)
Supported card system:	Mifare, Legic, Type (ISO14443-A (Typ 1,2,4) and ISO15693 (Typ 5)).

General details:

Operating temperature:	-10 to +0 °C
Humidity:	max. 80% rel., none condensing
Environmental conditions:	Stationary installation according to VDE 632, VDE 637
Degree of protection:	IP 40

Circuit diagram

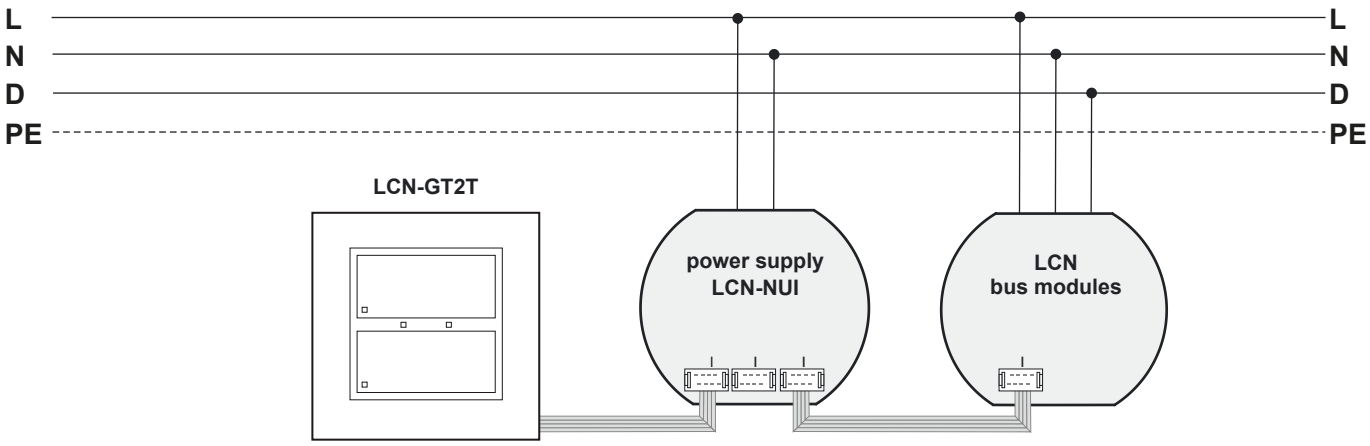

LCN | Weather Sensors

LCN-WIH

Weather station with DIN rail indoor unit

The weather station consists of an outdoor unit with built-in wind, rain, light, temperature and GPS sensor and an indoor interface unit with a microcomputer and power supply in a 2 MW case. The outdoor unit is mounted either on the roof or on a wall to the south side and is connected with a four-wire low voltage cable with the interface unit. The indoor unit itself connects to the LCN bus via the I-Port of a LCN-SHS, -SH, -HU, -LD or -UPP, -UPU, -UPS from serial number 160101 (since Jan 2012). Due to the GPS receiver LCN-WIH transfers the precise time and date into the LCN bus. The interface unit supports all time zones as well as local daylight saving times - worldwide.

Application field

LCN-WIH is a complete weather station for controlling all weather depending units and processes in a building. The parameters of all functions can be set within the connected LCN module.

Hardware

- Weater station (outdoor unit)
- Indoor unit (2 DU),
- Multi-function mounting bracket for wall- or pole-mounting

Functional specifications:

Outdoor unit

Wind sensor
The wind sensor works without moving parts: A measurement resistor is heated electrically. The blowing wind cools the resistor. The wind speed is calculated with help of the temperature loss and written into the T-variable.

Rain detector
The resistance between the electrodes on the lid of the rain detector is reduced by rain drops. The sensor activates the binary input 8 of the LCN module. When the sensor surface dries again, it takes approx. five minutes until the sensor reports “dry”.

Light sensor
The sensor value is transferred to the R2-variable. The light can be handled for example with threshold values. The sensor is embedded into the lid of the case. The measured light values are handled logarithmically in order to allow a large range of values.

Temperature sensor
The sensor value is transferred into the R1-variable.

GPS-receiver
The embedded GPS-receiver provides the current time at nuclear clock precision. The interface unit calculates the local time considering possible daylight saving time and sends it to the LCN-bus.

Indoor unit
The interface unit converts the data of the weather station and transfers it to it´s LCN module via the I-Port. It supplies the outdoor unit and needs 110-230V line voltage.

Note:
Attention: Connect without power!

A parallel operation with a LCN-IV (working as pulse counter/counting input) or IOS periphery is not possible. The weather station is wired with a common telephone cable 0.8 mm Ø.The maximum length of the cable is 50 meters.Detailed information is included in the installation guide.

LCN-WIH

Weather station with DIN rail indoor unit

Dimensions:

LCN-WIH (W x D x H):	96 × 77 × 118 mm
Assembly:	screw mounting

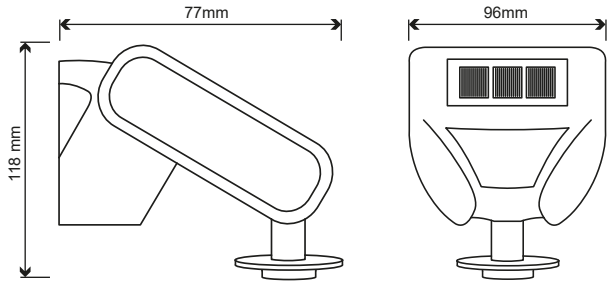

Indoor unit (W x D x H):	37 x 92 x 66,5 mm
Space requirement:	2 DU
Assembly:	TH35 on 35 mm mounting rail (DIN 50022)

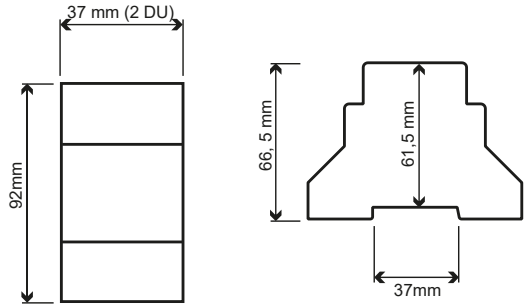

Circuit diagram

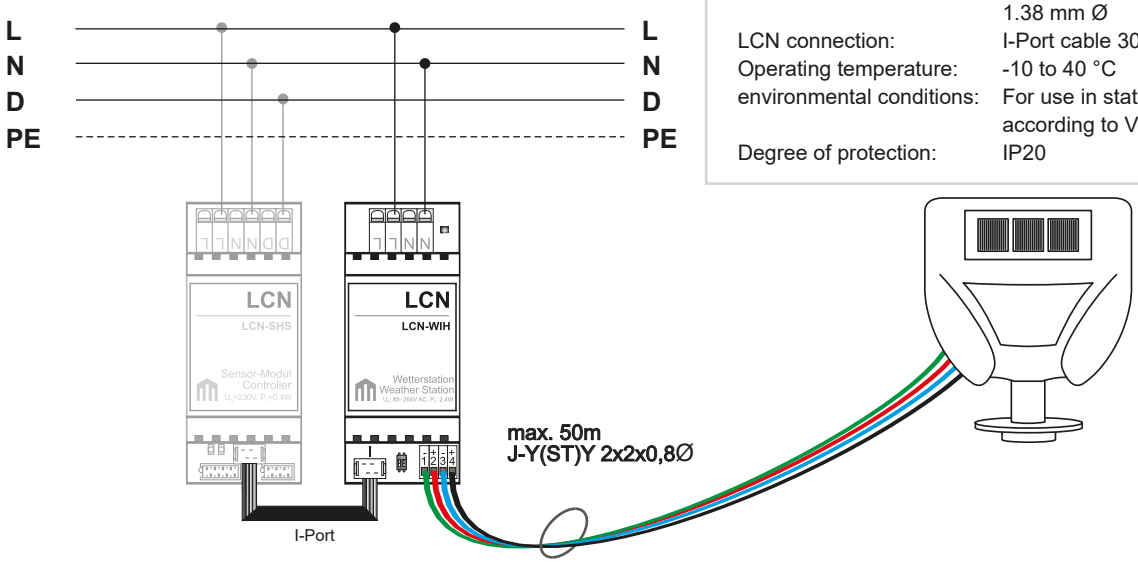

Technical Data:

Connection:

Power supply:	via LCN-WIH (indoor unit)
Terminals:	screwless, solid conductor max. 0.5 mm² (0.8 mm Ø)

wind sensor

Detection range:	Wind force 1-12 (0-35 m/s) (measured value at Var7)
Accuracy:	±22% of the measured value at 45° approaching angle and mast mounting

rain sensor

Power consumption:	1.2 W (heating)

light sensor

Measuring range:	0-100.000 lx
Resolution:	2 Lx at 0-1046 Lx, 4 lx at 1047 Lx (accuracy: ±35%)

temperature sensor

Measuring range:	-30 to 50 °C
Resolution:	0.1 °C
Accuracy:	max. ±1.5 °C

GPS receiver

Time zone:	Central European time (CET) with automatic time change

General data

Operating temperature:	-30 to 50 °C
environmental conditions:	For use in stationary Installation according to VDE632, VDE637
Degree of protection:	IP 44
Housing:	plastic
Colour:	white/translucent

evaluation unit

Supply voltage:	85-260 VAC, 50/60 Hz
Power consumption:	2.4 W
Type of conductor (supply):	screwless, solid max. 2.5 mm² or strand wire with ferrules max. 1.5 mm², max. 16 A
Conductor type:	screwless, solid or strand max. 0.2-1.5 mm²/0.5-1.38 mm Ø
LCN connection:	I-Port cable 300 mm
Operating temperature:	-10 to 40 °C
environmental conditions:	For use in stationary installation according to VDE 632, VDE 637
Degree of protection:	IP20

LCN-IW

Wind sensor

The LCN-IW is a wind sensor without a processor. Evaluation is carried out via an impulse counter connected to the I-Port of an LCN bus module.

The casing is weather-proof and has a connection cable of approximately two meters in length. It comes complete with an assembly kit for wall- or pole/mast fixing.

Application

The LCN-IW is used for measuring wind strength so that awnings, shutters and other facilities sensitive to wind can be protected. The parameters for the corresponding functions are set in the LCN bus modules within the LCN network.

Functional specifications:

The LCN wind sensor counts the pulses of the wind turbine. The turbine delivers eight potential free pulses per revolution. Connection and evaluation occur via an LCN-IV(H) and LCN bus module (not included in delivery). Connected over an LCN-IV with 2 metres of rubber sheathed cable.

Note:
The LCN-IW requires a LCN-HU, LCN-UPP, LCN-UPU or LCN-SH and the LCN pulse-counting cable for operation. For more detailed information please refer to the installation guide.

LCN-IW

Wind sensor

- **Wind sensor with connecting cable**
- **For operating on the I-Port**

Technical Data:

Connection:

Power supply:	Availability through LCN-IV
Connection power side:	2 m rubber tube cable

Sensor:

Record range:	6-21 m /s
Resolution:	8 pulses/revolution max.100 m

General details:

Operating temperature:	-10 to 40 °C
Environmental conditions:	Stationary installation according to VDE632, VDE637
Degree of protection:	IP 65

Dimensions:

LCN-IW (L x W x H):	40 × 40 × 95 mm
Rotor (Ø):	105 mm
Assembly:	screw mounting

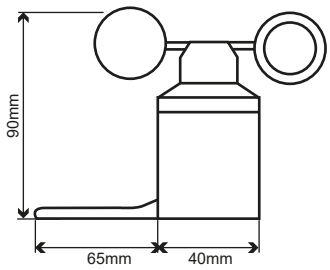

Circuit diagram

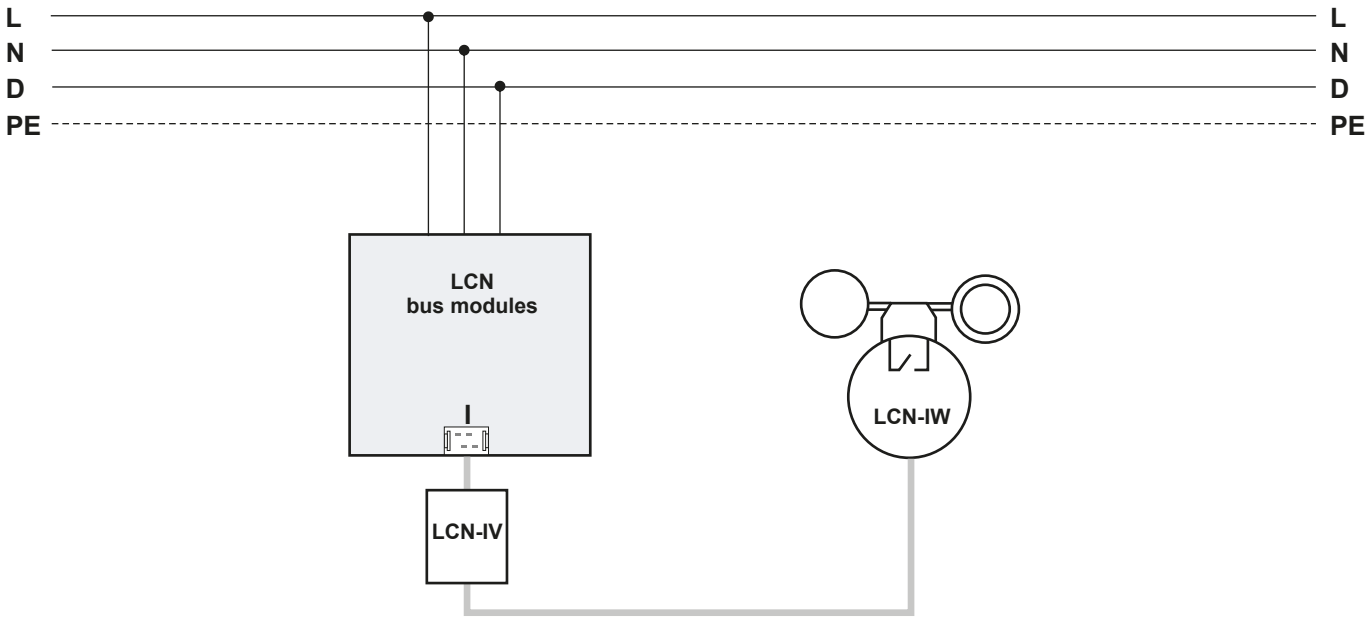

LCN-IW65

Complete wind sensor in IP65 Case

The LCN-IW65 is a wind sensor with an impulse counter and an integrated LCN bus module for evaluating the sensor's registered data. The parameters of the LCN bus module are set using the system software LCN-PRO.

The casing is accordingly weather-proof with an IP 65 housing and has a connection cable with a length of approximately two meters. It comes complete with the necessary assembly kit for wall or pole/ mast fixing.

Application

The LCN-IW65 is used for recognising wind strength so that awnings, shutters and other facilities sensitive to wind can be protected. The parameters for the corresponding functions are set in the LCN bus module.

Hardware

- 1 x LCN-UPS
- 1 x LCN-IV
- 1 x LCN-IW

Functional specifications:

The LCN wind sensor counts the pulses of the wind turbine. The turbine delivers eight pulses per revolution. The pulses are recorded with the LCN-IV on the I-Port connection of the LCN bus module and internally evaluated according to the parameters set.

The LCN-IW65 requires a 230 V power supply as well as the LCN data line for bus communication.

Note:
For more detailed information please refer to the installation guide.

LCN-IW65

Complete wind sensor in IP65 Case

- **Wind sensor complete with module**
- **Casing in a protection degree of IP65**
- **For operating on the I-Port**

Technical Data:

Connection:

Power supply:	230 VAC ±15%, 50 Hz
Power capactity:	< 0.5 W internal consumption
Connection power side:	strand wires 0.75 mm² (with insulated ferrules)

Sensor:

Record range:	6-21 m /s
Resolution:	8 pulses/revolution max.100 m

General details:

Operating temperature:	-10 to 40 °C
Environmental conditions:	Stationary installation according to VDE632, VDE637
Degree of protection:	IP 65

Dimensions:

LCN-IW65 (L x W x H):	40 × 40 × 95 mm
Rotor (Ø):	105 mm
Exterior Case:	120 x 80 x 50 mm
Assembly:	screw mounting

Windsensor:

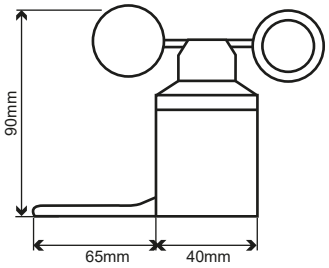

Außengehäuse:

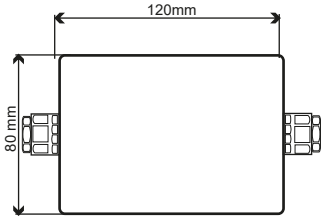

Circuit diagram

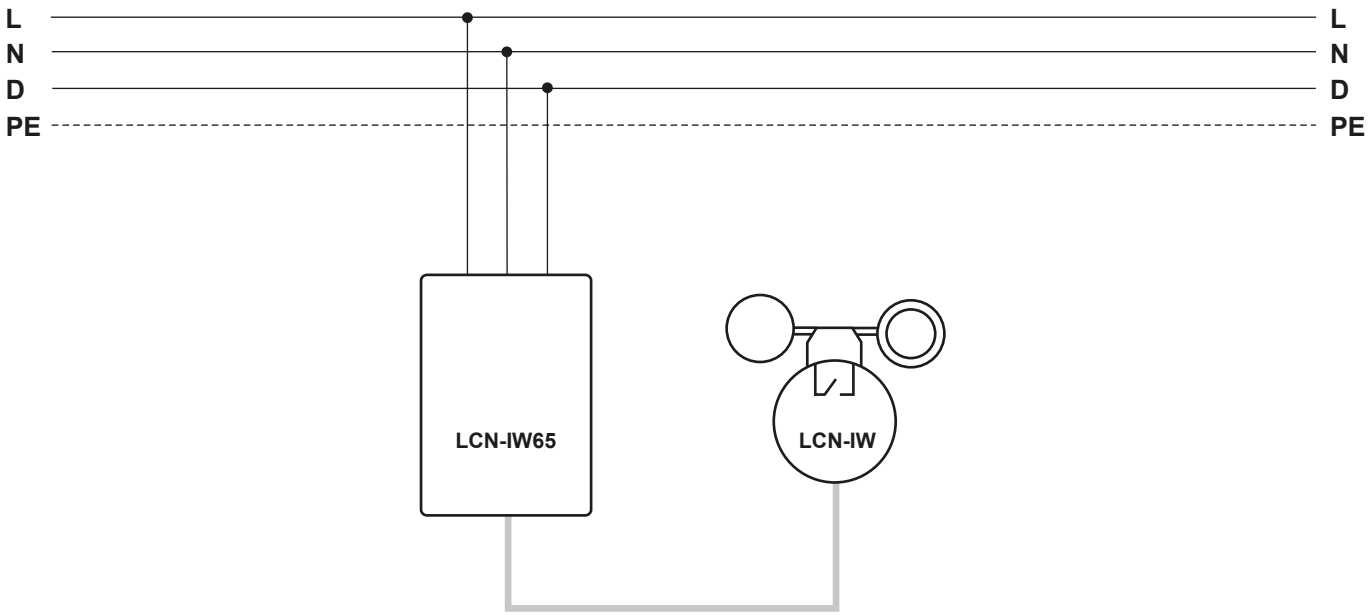

LCN-LSA

Light sensor for the outdoor area

The LCN-LSA is a light sensor for the outdoor area. The light sensor covers a very large measurement range of five decades (1-100,000 lux). The LCN-LSA can be combined with any I-Port peripheral equipment at the I-Port of all intelligent LCN modules like LCN-UPP, LCN-UPS, LCN-UPU, LCN-SH, LCN-SHS, LCN-HU or LCN-LD.

The LCN-LSA can take effect on the R1 and R2 controllers as well as the signal thresholds 1-4. Measured values can be exchanged between LCN modules and used for arithmetic operations. The sensor is supplied in a compact IP 65 housing.

Application

The LCN-LSA light sensor can be used to measure the brightness in the outdoor area. This allows complex control systems to be implemented for interior and exterior lighting as well as shading systems.

Hardware

- Light sensor in the IP65 housing for wall mounting
- Screw terminal for I-Port via over low power cable (up to 0.8 mm Ø)

Note:
The installation location of the photosensor has a strong influence on the measured values. Detailed information can be found in the installation guide.

LCN-LSA

Light sensor for the outdoor area

- **Light sensor for outdoor use**
- **Casing in a protection degree of IP65**
- **For operating on the I-Port**

Technical Data:

Light sensor:

Measuring spectrum:	450-650 nm
Measuring range:	1-100.000 lx
Accuracy:	±15% over the entire measuring range
Resolution:	1% of lux reading
I-Port connection:	screw terminal

General details:

Operating temperature:	-20 to 65 °C
Environmental conditions:	Stationary installation according to VDE632, VDE637
Degree of protection:	IP 65

Dimensions:

LCN-LSA (L x W x D):	51 × 51 × 36 mm
Assembly:	screw mounting

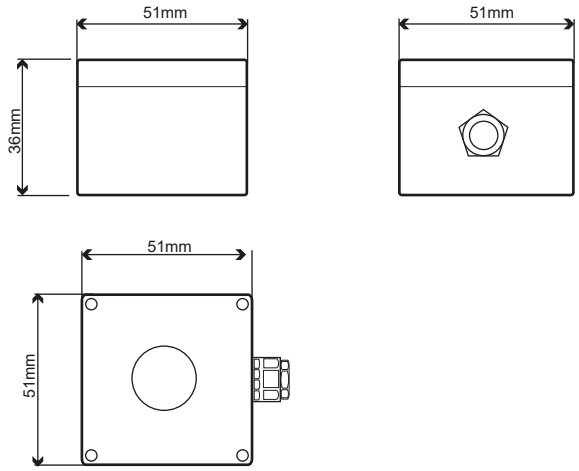

Circuit diagram

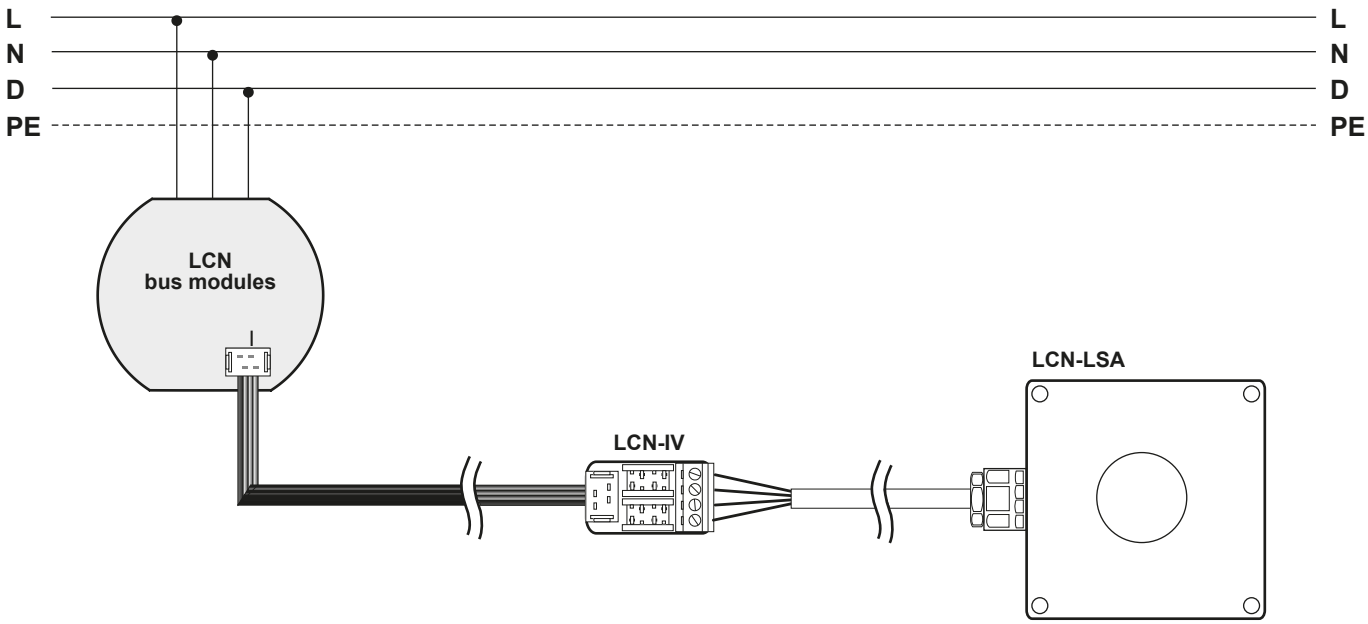

LCN | Software

LCN-PRO

LCN programming software (based on Windows)

LCN-PRO is the Windows-based LCN software for programming LCN modules. Apart from setting parameters the software controls errors and protocoll functions for the LCN system.

The software has two modes, online and offline. In the offline mode the system is pre-configurated and placed in a data base. Later, when a connection is established the parametrization is transferred to the project. The user can set up standard programming and put it into a library and place it at will via “Drag” and “Drop” into LCN systems.

Application

The LCN-PRO is based on a data base (project data) where the programming (setting of parameters) for the LCN modules is placed and stored. The LCN-PRO can programme as many projects as requested. Each project gets its own project data base. With the LCN-PRO it is possible to cut, copy and paste parameters, useful for key table where the same data can be used again or even for entire modules.

When offline, the set parameters are placed in the project data base. After setting up a connection to the LCN system, they are then transfered over to the corresponding modules.

When online, all changes are transferred to the data base and the corresponding LCN module is then programmed.

Technical Data

Hardware:	min. 1 GHz CPU min. 1 GB RAM free USB interface 100 MB hard disk space
Operating system:	Windows VISTA, 7, 8, 10, 11 Windows Home Server Windows Home Server 2011 Windows Server 2008/2008 R2 Windows Server 2012 R2

Note:
In order to allow communication with your LCN modules, you also need the PC coupling module LCN-PKU or LCN-PKE in addition to the LCN software.

LCN-PCHK

IP coupling software

LCN-PCHK is used for connecting an LCN-system with ethernet/internet. This way programmes like LCN-PRO or the visualisation software LCN-GVS can access the LCN-bus internally or via the internet.

LCN-PCHK integrates two interfaces:

- RS-232 (for connection with the LCN-bus)
- TCP/IP (for connection with an ethernet-network)

Application

With the coupling software LCN-PCHK a TCP/IP coupling between the LCN bus and the LCN software is realized. The software is also used for coupling the LCN bus to third party systems. These can be e. g: third party visualisation systems, management systems, HVAC control or fire alarm systems.

With LCN-PCHK it is possible to access the LCN-bus with various programmes, whereas only one LCN-PKU coupler is needed. One connection is included in the full version, extra connections are available as an upgrade.

LCN-PCHK supports two protocols:

- the internal mode for LCN-PRO and LCN-GVS
- the PCK-modus, which allows third party software to control the LCN-bus and provides them automatically with all status reports. The PCK-documentation can be obtained free of charge upon request.

Technical Data

Hardware:	min. 233 MHz CPU min. 64 MB RAM free USB interface 30 MB hard disk space
Operating system:	Windows VISTA, 7, 8, 10, 11 Windows Server 2008/2008 R2 Windows Server 2012 R2 Linux (various platforms) on request

Note:
In order to communicate with the LCN modules, a PC coupling module LCN-PKU or LCN-PKE is needed.

LCN-GVS

Global Visualization System

LCN-GVS is a central server for visualisation which can control and administrate nearly any facilities and buildings equipped with the LCN system world-wide.

Besides the standard functions, the LCN-GVS also covers measurement data acquisition, automatic timers, central access control with individual persons registration, alarm technology and incident reports (incl. associated logical operations, also with time and date) as well as reporting via SMS, e-mail, etc.

The LCN-GVS is a browser based system so the user can have access to the building via any online PC, smart phone etc. Single user access rights to rooms, buildings or groups of these can be allocated via a comprehensive user account control system. Communication between the LCN-GVS visualisation server and the real estate distributed all over the world take place via a coded connection. Due to a new licence system the LCN-GVS comes with the complete range of visualization functions and is very reasonable especially for small buildings. For large buildings the system can be upgraded via licence keys. Configuration of the GVS-tableau/control panels, access, etc as well as backup services are carried out over browser. The GVS enables a wide range of visual design options for the user interfaces. Freely selectable symbols can be individually combined with the text and a large collection of animated graphics can furnish the tableaus with particularly vivid designs.

The LCN-GVS visualisation system is browser independent and can be used with modern mobile devices such as mobile phones and smartphones. The LCN-GVS allows for a great number of visualisations being run simultaneously and has already succeeded in implementing 2500 different icons. For a mobile and comfortable control is the LCN-GVS App is available

Application fields

- Visualization, monitoring and operation of large real estate properties world-wide.
- Visualization of smaller real estates..
- Control and monitoring of energy efficiency in buildings and real estates using data recording devices.
- Entry restriction control and person identification for every building with central/decentral authorisation administration system.
- Automatic monitoring of incidents according to any chosen criteria. The incident report device not only triggers an alarm signal but can also take action independently.
- Numerous other applications.

Technical Data

LCN-GVS PC

Operating server:	– Windows all server variations as from 2008 or later – Windows after Windows 7 as Home premium or higher.
Hardware:	– min. 1 GHz Pentium IV – min. 1 GB RAM – free USB-Port – 2 GB hard disk space

*with all current updates!

If you have any questions then
Please contact us! +49 50 66 / 99 88 44!

Client:
All actual web browser versions can be used

Recommended:	– Microsoft Internet Explorer 9.0 – Mozilla Firefox – Apple safari – Google Chrome – Opera (vers. 8 or later)
LCN-GVS App:	– IOS 5.1.1 or later – Android 2.3.3 or later

LCN-module-firmware requirements:
The LCN-GVS reacts to status reports of older LCN-modules as follows:

Firmware modules	queryable information
060101 (Jan. 1996)	Relay- / Binary sensors- / Sums- / Output status
090218 (Feb. 1998)	like 060101, incl.: actual values
100A06 (Oct. 2006)	like 0A0A0B, incl.: set points

Control commands are processed starting with firmware 060101 (Jan. 1996).

LCN-GVS

Global Visualization System

- **Building controls worldwide**
- **Measured data coverage, data recorder**
- **Central access control with person registration**
- **Alarm technic and an incident report**

License structure LCN-GVS

LCN-GVS is a global visualisation software package for the administration and operation of any number of LCN installations world-wide.

With the right licence code the following LCN-GVS functions can be extended:

- automatic timers/time switches with unlimited number of channels
- incident and disturbance reporting for print, e-mail, SMS etc.
- building users for access control
- MBS hardware

The basic version LCN-GVS includes:

- 1 x Licence module = 10 modules
- 1 x Licence building users = 5 users
- 1 x Licence time switching channels = 10 channels
- 1 x Licence incident reporting = 10 incident reports devices
- 1 x Licence tableaus = 10 tableaus

License package for GVS:

LCN-GVSM
Modules in steps of 10 (max. 2500 per code)

LCN–GVSU
Building users in steps of 5 (max. 1250)

LCN–GVSZ
Switching channels in steps of 10 (max. 2500)

LCN–GVSE
Incident reports in steps of 10 (max. 2500)

LCN–GVST
Tableaus in steps of 10 (max. 2550)

Note:
License codes can be purchased additionally at any time; for example: to increase the amount of incident reports. Every new licence is added to the existing one. For more detailed information please refer to the installation guide.

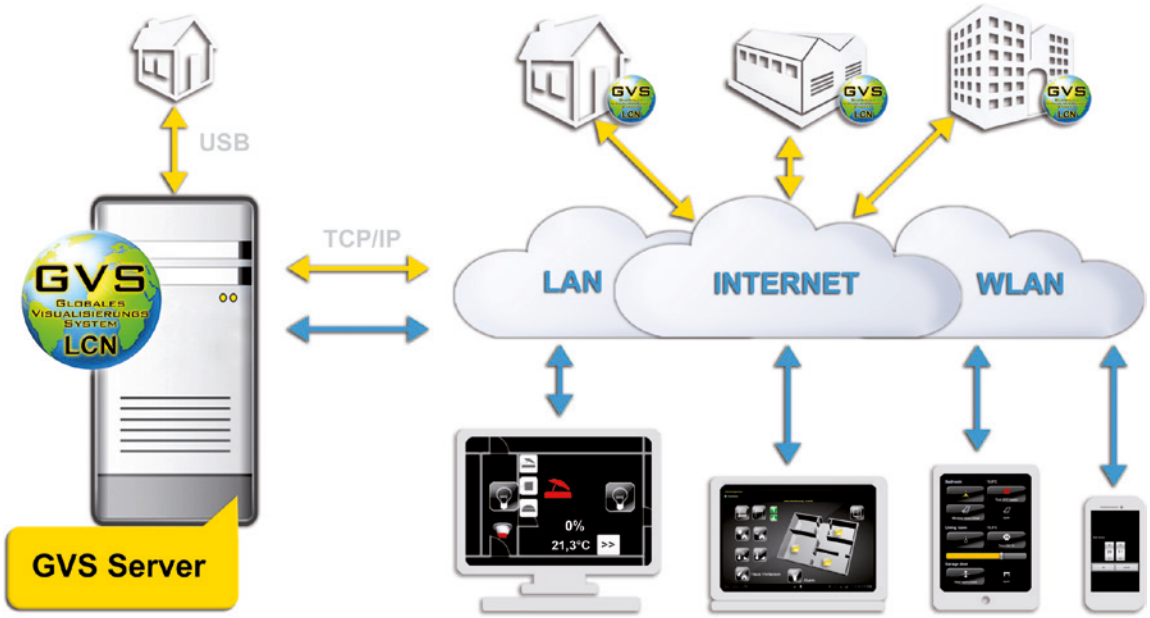

LCN-GVShome

Visualisation server with LCN-GVS

The LCN-GVShome system is a central control unit for private homes. On this maintenance-free LCN-GVShome PC the LCN-GVS visualization software is already preinstalled. Using a web browser or a smartphone App a complete building can be controlled and visualized. The required Microsoft® Windows® software license is also included.

The visualization system for control and management of a building includes, in addition to standard functions in building automation, time switching functions, a central access control registering persons and an event reporting feature. This includes logical combinations plus date and time functions. Messages can be sent via email, SMS or other methods. The connection to the LCN bus is achieved with the LCN-PKU coupler. When using a router, the PC may be connected via RJ45 cable to a local area network.

Application areas

- Visualization, monitoring and control of worldwide distributed large properties
- Visualization of smaller properties
- Control and monitoring of energy efficiency in buildings and properties with data recorders
- Access control with person identification for all buildings with central and decentral management of access rights
- Automatic event monitoring on any desired criteria; the data recorder not only generates alarms, but also reacts on events
- And many more functions and features

Software licence
The included licence allows control and visualization of up to 40 LCN modules. If more modules are installed in a building, the number of modules can be increased with an extension licence. This is also valid for other licenced options, for example time control functions.

The connection to the LCN bus is carried out using an LCN-PKU directly or with an LCN-PCHK connection. The most important benefit is then that the LCN-PRO and the LCN-GVS have parallel access to the bus. The connection to the LCN bus must be established before any tableau can be created. To create a tableau in LCN-GVS you will need the LCN-PRO project file.

LCN-GVShome includes licences for:
- 20 modules/4 tableaus
- 4 time switching functions
- 4 event reporting functions
- 4 access control functions
- 2 connections LCN-PCHK (1 x LCN-GVS, 1 x -PRO)

Hints
The system is recommended for private homes with a maximum of 100 LCN modules, 20 persons/users, a maximum of 10 parallel connections to the LCN-GVS are possible (via web browser or App). The LCN-GHShome system may only be used for building automation with the LCN-GVS.

Technical data

Main power

Power supply:	230 VAC ±15%, 50/60 Hz
Power consumption:	4,5 W in idle mode max. 10 W under full load

System

Operating system:	Windows 10 Enterprise 2016 LTSB 64Bit
Hardware:	Intel Celeron N4100, 4GB DDR4-RAM, 64GB SSD LAN,WLAN DualBand, Bluetooth 4.2, 3x USB3.1, HDMI 2.0, microSD-CardReader
LCN-GVS licences:	20 modules, 4 tableaus 4 time switching functions 4 event reporting functions 4 access control functions 2 connections LCN-PCHK

User interface:
All recent web browsers and versions can be used

recommended:	Microsoft Internet Explorer 9.0 Mozilla Firefox Apple Safari Google Chrome/Iron Opera (from version 8)

LCN-GVS App:
iOS 5.1.1 or later, Android 2.3.3 or later

Installation

Operating temperature:	-10 to 40 °C
Humidity:	max. 80% non condensing
Environment:	stationary installation, according to VDE632, VDE637
Protecton class:	IP 20
Dimensions: (W x D x H)	121 × 121 × 28,5 mm 4.7 x 4.7 x 1.1 inch.
Mounting:	Wall mounting bracket in scope of delivery (VESA bracket)

LCN-GVShome

Visualisation server with LCN-GVS

- **GVShome PC for building automation**
- **Includes LCN-GVS and LCN-PCHK licences**
- **Includes operating system Microsoft Windows 10**
- **Completely preinstalled and maintenance-free**
- **Ports (80, 443, 4220, 4114) unlocked**
- **Safe connections with SSL certificate**

Licence structure LCN-GVS

LCN-GVS is the global visualization software for worldwide administration and operation of an unlimited number of LCN installations. Per licence key the following functions sets can be extended:

- Time switching functions
- Event reporting for printing, email, SMS etc.
- Users for access control
- BACnet server
- ModBus slave
- OPC server

Licence packages for LCN-GVS:

LCN–GVSM
Number of modules in steps of 10 (max. 2500 per key)

LCN–GVSU
Users in steps of 5 (max. 1250)

LCN–GVSZ
Time switching functions in steps of 10 (max. 2500)

LCN–GVSE
Event reporting functions in steps of 10 (max. 2500)

LCN–GVST
Tableaus in steps of 10 (max. 2550)

Hints:
Licence keys can be purchased at any time, e. g. to increase the number of event reporting functions. Every licence is added to the existing one.

Circuit diagram

LCN | Accessories

LCN-WB11 | LCN-WB22

Wallbox with 11 kW or 22 kW and LCN energy management

Die The LCN-WB is a wallbox for AC charging of electric cars with type 2 connection. Thanks to its LCN data connection, it can be fully integrated into an LCN Smart Home.

The wallbox is available in two versions, LCN-WB11 for maximum charging power 11kW, the LCN-WB22 for maximum charging power 22kW.

The wallbox has the usual LCN intelligence, so that the wallbox can be freely programmed as usual with the appropriate LCN prior knowledge.

LCN-WB11

Application

The LCN-WB11 and LCN-WB22 wallboxes are fully integrated into the LCN system: they can be controlled and monitored by any push-button and by LCN-GVS and LCN-VISU. If solar data is available in the LCN bus, they charge with solar surplus on request. LCN offers you many different charging modes that you can freely configure and assign to the buttons of an LCN-GT12, for example.

Examples of charging programs:

Super Solar: It is only charged with solar power

20+ economy: First 20% charging, then only solar power

Saving date: first save, from a given time onwards secure load

These modes can of course be individually modified in the LCN-PRO as required and adapted to your needs

LCN-WB22

Hardware

- Charging current 16A or 32A with all-current fault protection
- LCN energy management
- Type 2 socket
- Two additional dimming outputs, e.g. for garage lighting
- 2 touch buttons (LCN-WB22)
- RFID reader (LCN-WB22)
- Electricity meter with digital display (LCN-WB22)
- A Current charging power as a measured value in the LCN-BUS (LCN-WB22)
- Charged energy as a measured value in the LCN-BUS (LCN-WB22)

The wallboxes work without further LCN programming and without connection to an LCN installation, they then supply the maximum permissible current (LCN-WB11: 16A, LCN-WB22: 16-32A, depending on the charging cable used).

LCN-WB11 | LCN-WB22

Wallbox with 11 kW or 22 kW and LCN energy management

- **Charging power 11 kW or 22 kW**
- **Type 2 socket**
- **Two additional dimming outputs, e.g. for lighting**
- **LCN energy management**

Technical Data

Connection:

Supply voltage:	3-phase, 230 V AC ± 15%, 50/60 Hz

Charging performance:

LCN-WB11:	11 kW
LCN-WB22:	22 kW

Charging current:

LCN-WB11:	16A with all-current fault protection
LCN-WB22:	32A with all-current fault protection

Load side connection:

LCN-WB11	2.5 to 6 mm²
LCN-WB22	4 to 6 mm ²
Charging socket:	Type 2

Connection LCN side: 1.5 to 2.5 mm²

Dimming outputs

Type:	2 zero-voltage switches or leading edge phase control dimmers,,
Switching capacity:	300 VA each (cosφ=1)
Overload resistance:	per 1 kW max. 10 s

Installation

Operating temperature	-40°C to +40°C
Environmental conditions:	Use in fixed installations in accordance with VDE 632, VDE 637
Protection class:	IP 54

Additional function LCN-WB22:
Activation via transponder (Mifare)
2 touch buttons freely parameterizable

Conformity
IEC 61851-1:2010-11 Ed. 2.0, EN 61851-1:2011
Low Voltage Directive 2014/35/EU
EMC Directive / EMC Directive 2014/30/EU
RoHS Directive 2011/65/EU

Dimensions:

LCN-WB11/WB22 (L x W xD):	222 x 369 x 130 mm
Installation:	Screw mounting

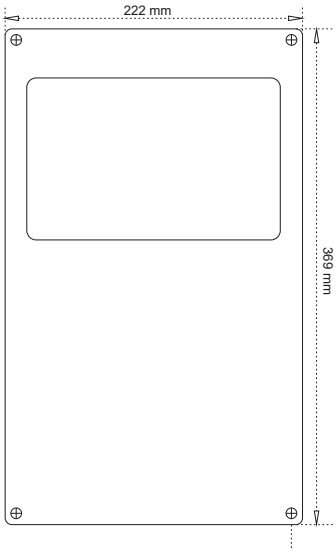

Circuit diagram

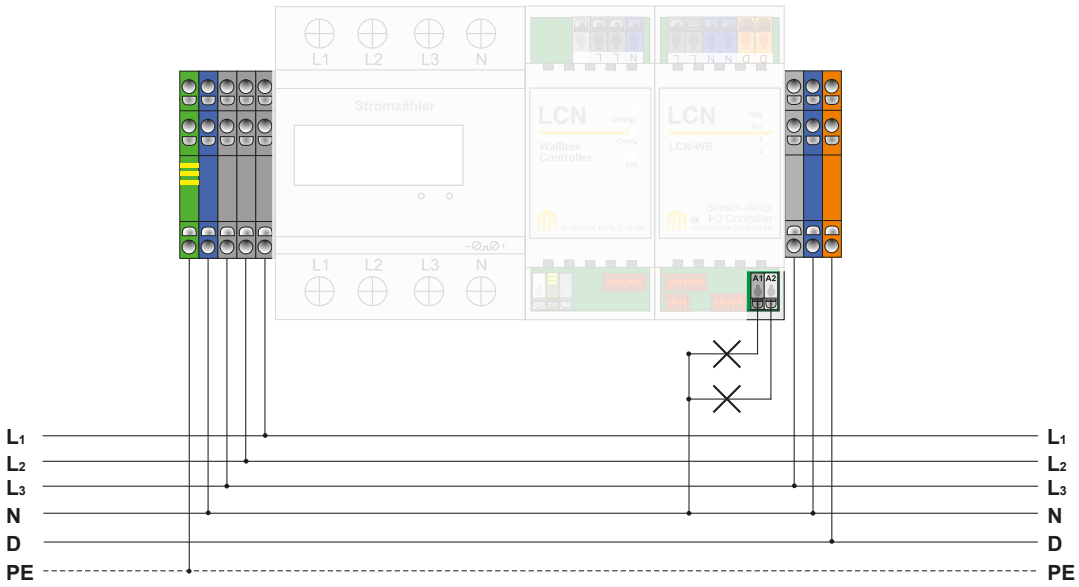

ISSENDORFF KG Magdeburger Str.3 30880 Laatzen - Germany Tel: +49 5066 99 80 www.LCN.eu

LCN-IV

I-Port extension for LCN

The LCN-IV is used for multiplying the I-Port connections on an intelligent bus module. This allows for several sensors to be connected to the module.

Application

The LCN-IV is used for connecting more than one sensor to an intelligent bus module and for separating the sensors locally from the module. In this way for example, remote-control receivers, temperature sensors and a binary sensors can be decentrally installed together on site. In doing so, each room has its own functional unit e. g. lighting, alarm system and temperature regulation.

Additionally, the LCN-IV allows sensors to be strategically placed which is useful when considering such factors as heat radiated from lights, field of view etc. By using the screw terminals, the LCN-IV can be coupled with a second LCN-IV. The IY(ST)Y 2 x 2 x 0.6 mm Ø is recommended as the supply cable which must not exceed a max. length of 50 meters. Alternatively, the LCN-IV can be used as an impulse counting device for fast signals with max. 500 Hz, e. g. wind sensor.

Hardware

- Cable with plug for the I-Port connection
- Two spare I-Port sockets for connecting further peripherals
- Screw terminals for cable up to 2 x 0.6 mm Ø or 1 x 0.8 mm Ø

Functional specifications:

Serving as either an extension for the I-Port connector or as an adapter for further I - Port connections, the LCN-IV has no active function.

When used as an impulse counter it provides the module with its counter value. This can then be evaluated via the switching threshold.

LCN-IK70

I connection cable 70 cm

- Cable for the I-connection, 70 cm
- PU: 4 pieces

Note:
When the LCN-IV is used as an impulse sensor, the utilisation of other devices on the LCN-IV is not possible. For more detailed information please refer to the installation guide.

LCN-IV

I-Port extension for LCN

- **I-Port adapter for extending and distributing**
- **Alternatively as pulse counter input up to a 5 peripheries**
- **500 Hertz maximum**
- **For flush-mounted boxes**

Technical Data

Connection:

Wiring option:	for screwing
Conductor type:	solid or strand wire max. 0.8 mm Ø), with and without insulated ferrules
Cable length:	max. 50 m

Ports:

T-Connection:	not available
I-Connection:	available, double
P-Connection:	not available

General data:

Operating temperature:	-10 to 60 °C
Humidity:	max. 80% rel., non condensing
Environmental conditions:	stationary installation according to VDE 632, VDE637
Degree of protection:	IP 20

Dimensions:

LCN-IV (L x W xD):	22 x 12 x 13 mm
Supply Cable:	300 mm
Assembly:	decentralized installation in deep flush-mounted box

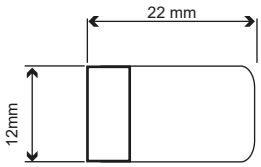

Circuit diagram

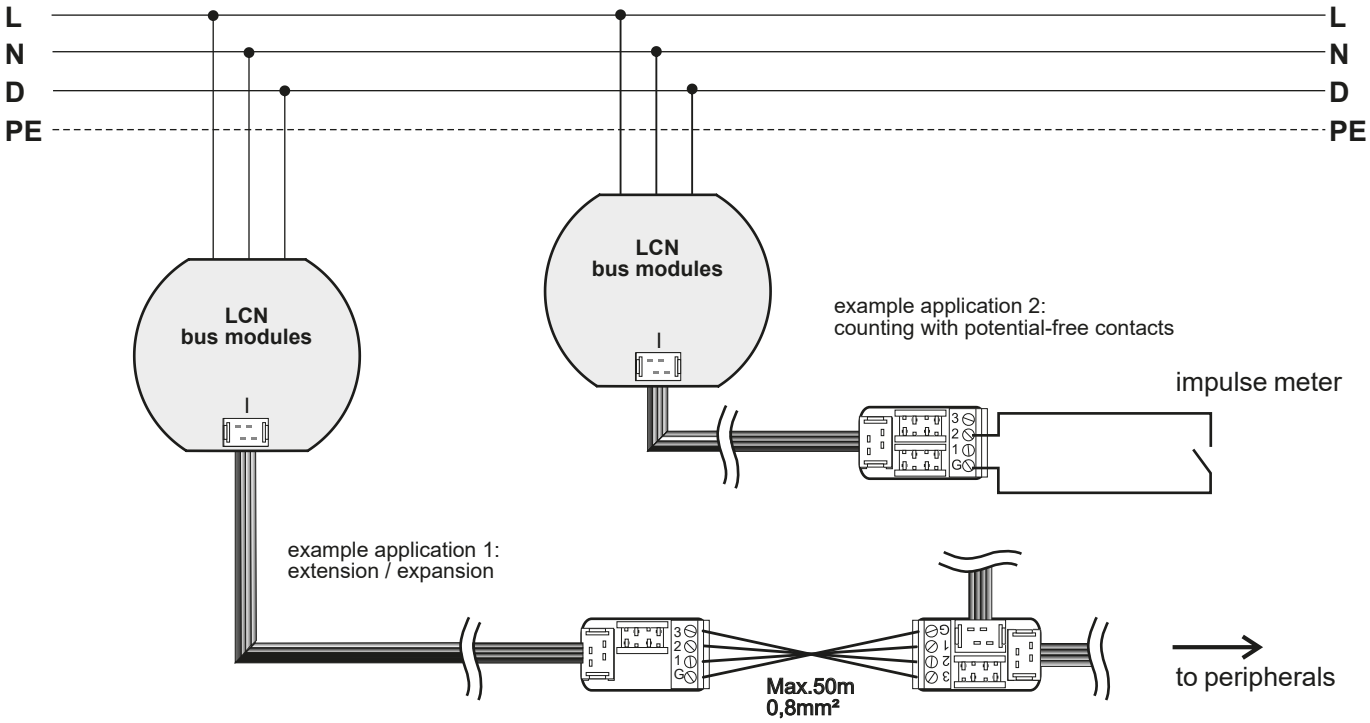

LCN-IVH

Adapter for I-Port extension or duplication for DIN rail mounting

The LCN-IVH is used for extending and splitting the I-Port connection so that sensors for the I-Port, e. g temperature sensors or remote control receivers, can be decentrally installed

Application

The LCN-IVH is used for expanding the I-Port connections on an intelligent bus module, so several sensors can be operated by one intelligent module. By using the screw terminals the port can be extended up to 50 meters using the IY(ST)Y 2 x 2 x 0.6 cable. Alternatively, the LCN-IVH can be used as an impulse- counting device for fast signals up to max. 500 Hz, e. g. for a wind sensor.

Hardware

- One I-Port connection cable
- One I-Port connection for further peripherals
- Screw terminals for connection extension.

Note:
When the LCN-IVH is used as an impulse sensor, the use of other devices on the LCN-IVH is not possible. When deploying LCN peripherals such as LCN-RR, LCN-PMI, LCN-TS etc., an LCN-IV is necessary additionally. For more detailed information please refer to the installation guide.

LCN-IVH

Adapter for I-Port extension or duplication for DIN rail mounting

- **I-Port adapter for extending and distributing**
- **Alternatively as pulse counter input up to a 5 peripheries**
- **500 Hertz maximum**
- **For DIN rail mounting**

Technical Data

Connection:

Wiring option:	for screwing
Conductor type:	solid or strand wire max. 0.8 mm Ø, with and without insulated ferrules
Cable length:	max. 50 m

Ports:

I-connection:	single, with screw terminals

General data:

Operating temperature:	-10 to 60 °C
Humidity:	max. 80% rel., non condensing
Environmental conditions:	stationary installation according to VDE 632, VDE637
Degree of protection:	IP 20

Dimensions:

LCN-IVH (L x W xD):	17 x 92 x 66,5 mm
Supply Cable:	300 mm
Space requirement:	1 DU

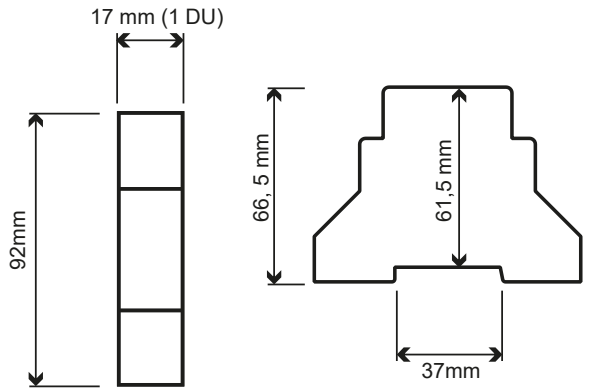

Circuit diagram

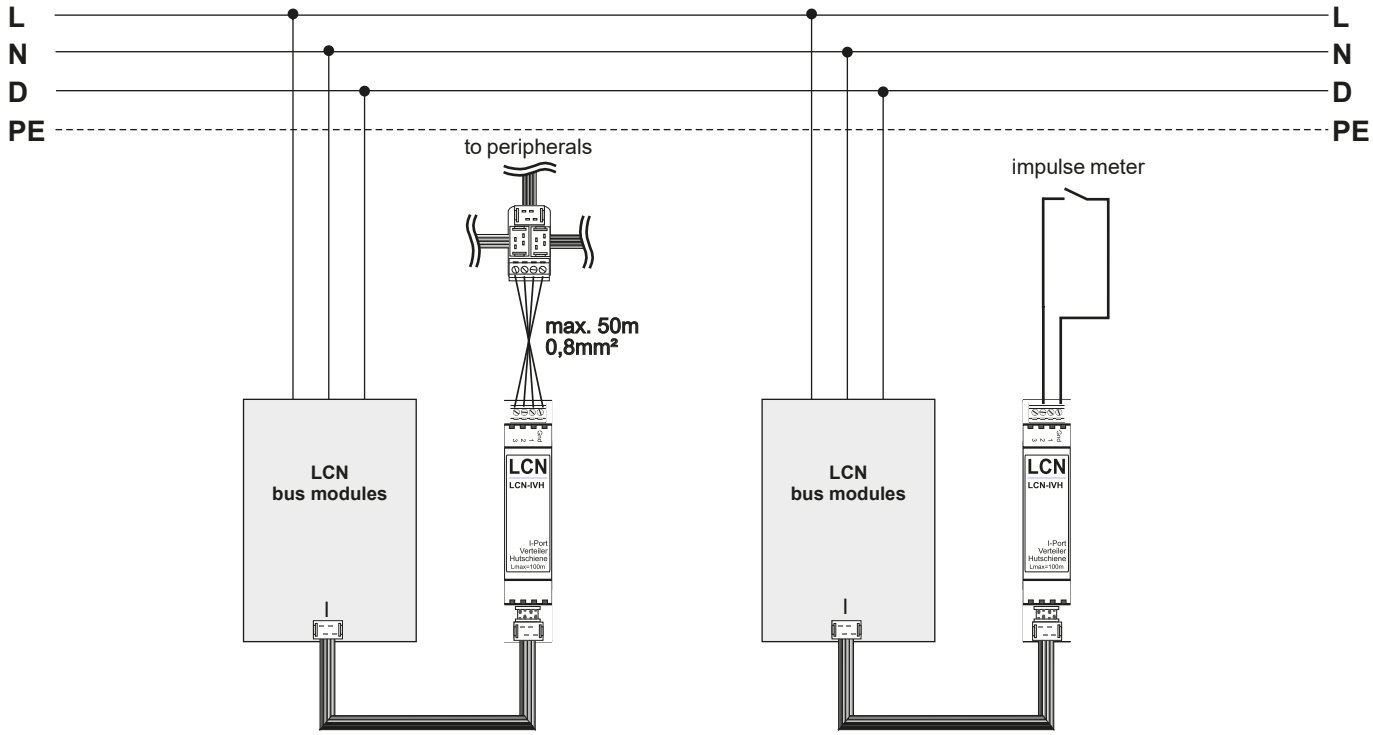

LCN-NU9

Power supply unit for power supply of 9 Volt LCN peripherals

The LCN-NU9 is a power supply unit for the flush box. It is used to supply power to LCN peripherals which require a supply voltage of 9 volts, such as the LCN-CO2 sensor.

Application field

The LCN-NU9 has screw terminals where the output voltage is available.

Hardware

- Terminals for the output voltage
- Litz wires for the feed

Note:
Peripheries that are only intended for operating with 5 volts, as for example the LCN-GT4D, LCN-GT10D or LCN-MT4, must not be connected to the LCN-NU9. The LCN-NUI is availabe for such purposes.

LCN-NU9

Power supply unit for power supply of 9 Volt LCN peripherals

- **Power supply with a 9 volt DC output**
- **For voltage supply to the LCN-ULT**

Technical Data

Connection

Power supply:	85-265 VAC ±15%, 50/60 Hz
Power output:	max. 2.5 W
Connection power side:	strand wires 0.75 mm² (with insulated ferrules)

Output

Voltage:	9 VDC (stabilized)
Power output:	max. 2.5 W

Connection

Periphery:	solid or stranded wire 0.14-0.5 mm² Stranded wire with ferrule 0.25-0.5 mm²

General details:

Operating temperature:	-10 to 40 °C
Humidity:	max. 80% rel., non condensing
Environmental conditions:	Stationary installation according to VDE 632,VDE 637,
Degree of protection:	IP 20 when mounted in Flush-mounted box

Dimensions

LCN-NU9 (Ø x H):	50 x 20 mm
Installation:	decentralized installation in deep flush-mounted boxes

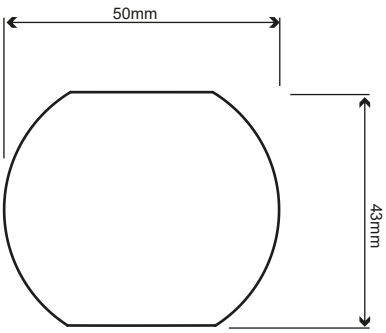

Circuit diagram

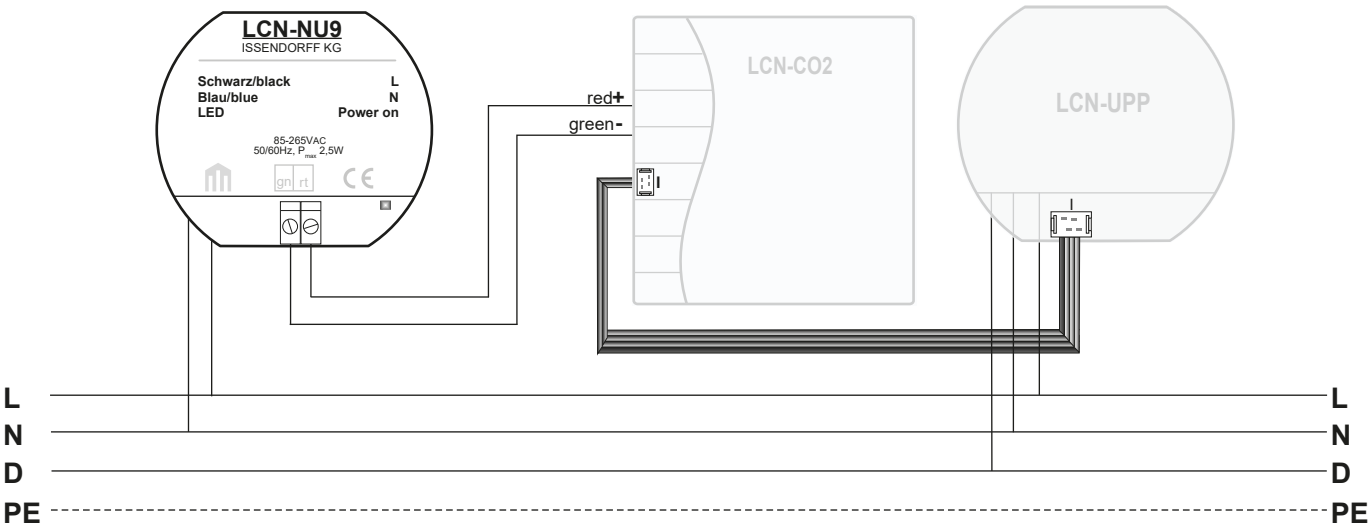

LCN-NUI

I-Port power supply unit for flush mounting

LCN-NUI is a power supply unit for flush-mounting. It supplies LCN-GT keypads over the I-Port.

Application Field

The LCN-NUI can be looped into the I-port cable and supplies the components on the I-and T-Port with the required operating voltage. This power unit supplies enough power to provide all the possible I-port connections on an intelligent module. When using the power unit, the surface optical fibres, and especially the corona surrounding light from the GT sensor-keys are available.

Hardware

- Three terminals for the I-Port connection

Note:
The I-Port cable can be extended up to 50 meters (all diverted lengths added up) with an LCN-IV (use Ø 0.5/0.8 mm) But: The distance from LCN-NUI up to a maximum of two LCN-GT glass touch keypads must not be longer than 20 meters. For more detailed information please refer to the installation guide.

LCN-NUI

I-Port Power supply unit for flush mounting

- **Power supply with a 5 volt DC output**
- **For voltage supply to the GT keypads**
- **With extra three I-Port connections**

Technical Data

Connection

Power supply:	110-230 VAC, 50/60 Hz
Connection power side:	2 strand wires 0.75 mm² (with insulated ferrules)

Output

Voltage:	5 VDC
Power output:	max. 2.5 W

Ports

I-Port:	available, 3 connections

General details:

Operating temperature:	-10 to 40 °C
Humidity:	max. 80% rel., non condensing
Environmental conditions:	Stationary installation according to VDE 632,VDE 637,
Degree of protection:	IP 20

Dimensions:

LCN-NUI (Ø x H):	50 x 20 mm
Installation:	decentralized installation in deep flush-mounted box

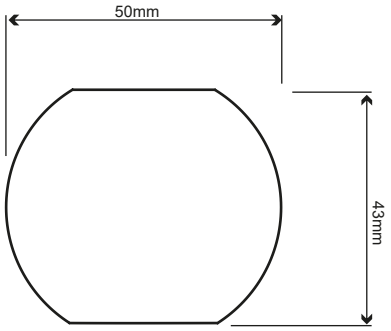

Circuit diagram

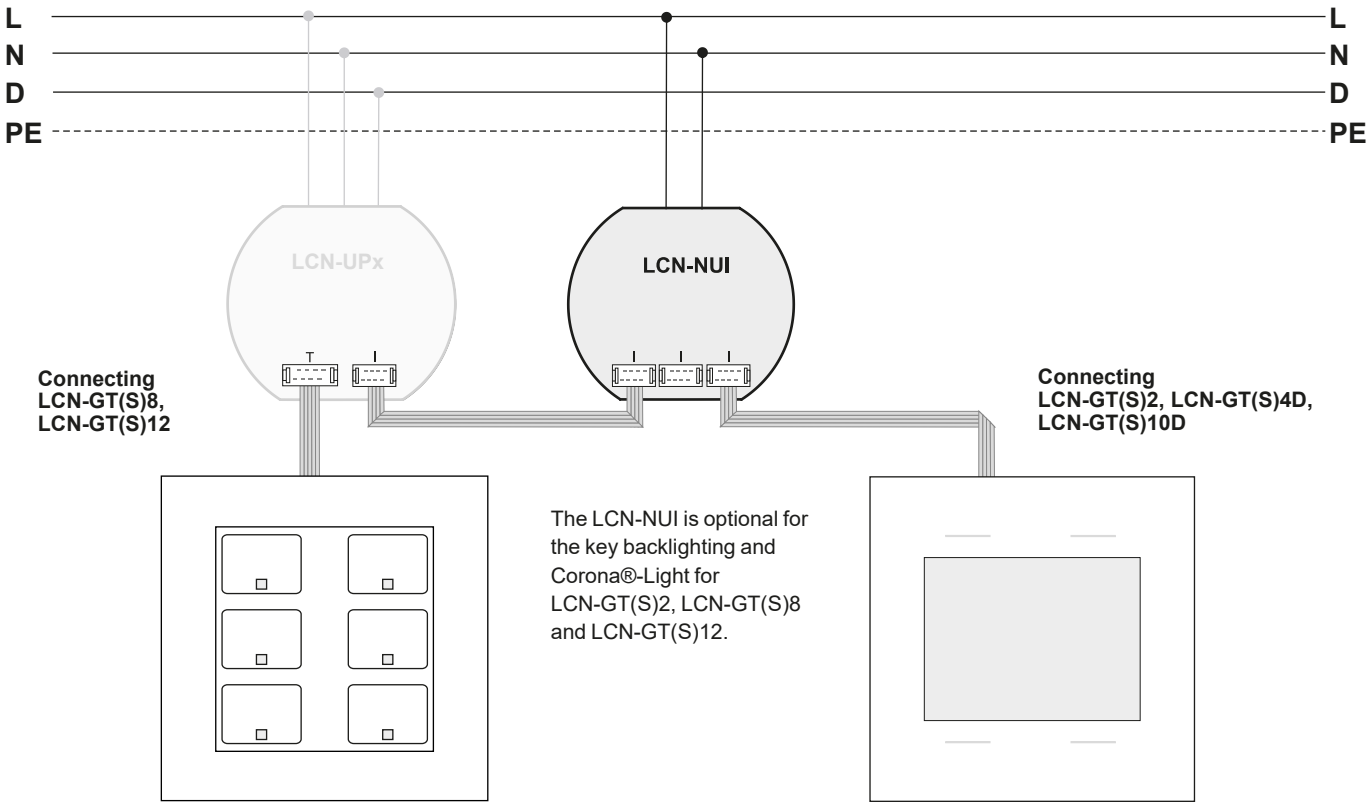

LCN-NUI24

24 V I-Port power supply unit for flush mounting

LCN-NUI24 is a power supply unit for flush mounting. It supplies LCN-GT-keypads via the I-Port.

Description

LCN-NUI24 is a power supply to provide the LCN-GT glass touch keypads with power and is operated on the T- and I-Port. Thanks to the looped through I-Port, it can be simply looped into the I-Port cable and supply the modules over this cable. As a power supply it has enough power to supply all possible I-Port components of intelligent LCN-modules.

When using the power supply, the blue key background light and especially the Corona® lights are available on the LCN-GT glass touch keypads.

Hardware

- 1 x I-Port connection cable

Note:
I-port guidelines

The I-Port cable can be extended up to 50 meters (all diverted lengths added up) with an LCN-IV (use Ø 0.5/0.8 mm). The distance from LCN-NUI24 up to a maximum of two LCN-GT glass touch keypads must not be longer than 20 meters. For more detailed information please refer to the installation guide.

LCN-NUI24

24 V I-Port Power supply unit for flush mounting

- **Power supply with a 5 volt DC output**
- **Input voltage 24V**
- **For voltage supply to the GT keypads**
- **With three I-Port connections**

Technical Data

Connection

Power supply:	20-30 VAC, 50/60 Hz
Connection power side:	2 strand wires 0.75 mm² (with insulated ferrules)

Output

Voltage:	5 VDC
Power output:	max. 2.5 W

Ports

I-connection:	available, 3 connections

General details:

Operating temperature:	-10 to 40 °C
Humidity:	max. 80% rel., non condensing
Environmental conditions:	Stationary installation according to VDE 632,VDE 637,
Degree of protection:	IP 20

Dimensions:

LCN-NUI24 (Ø x H):	50 x 20 mm
Installation:	decentralized installation in a deep flush-mounted box

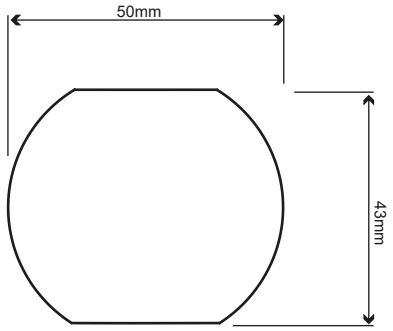

Circuit diagram

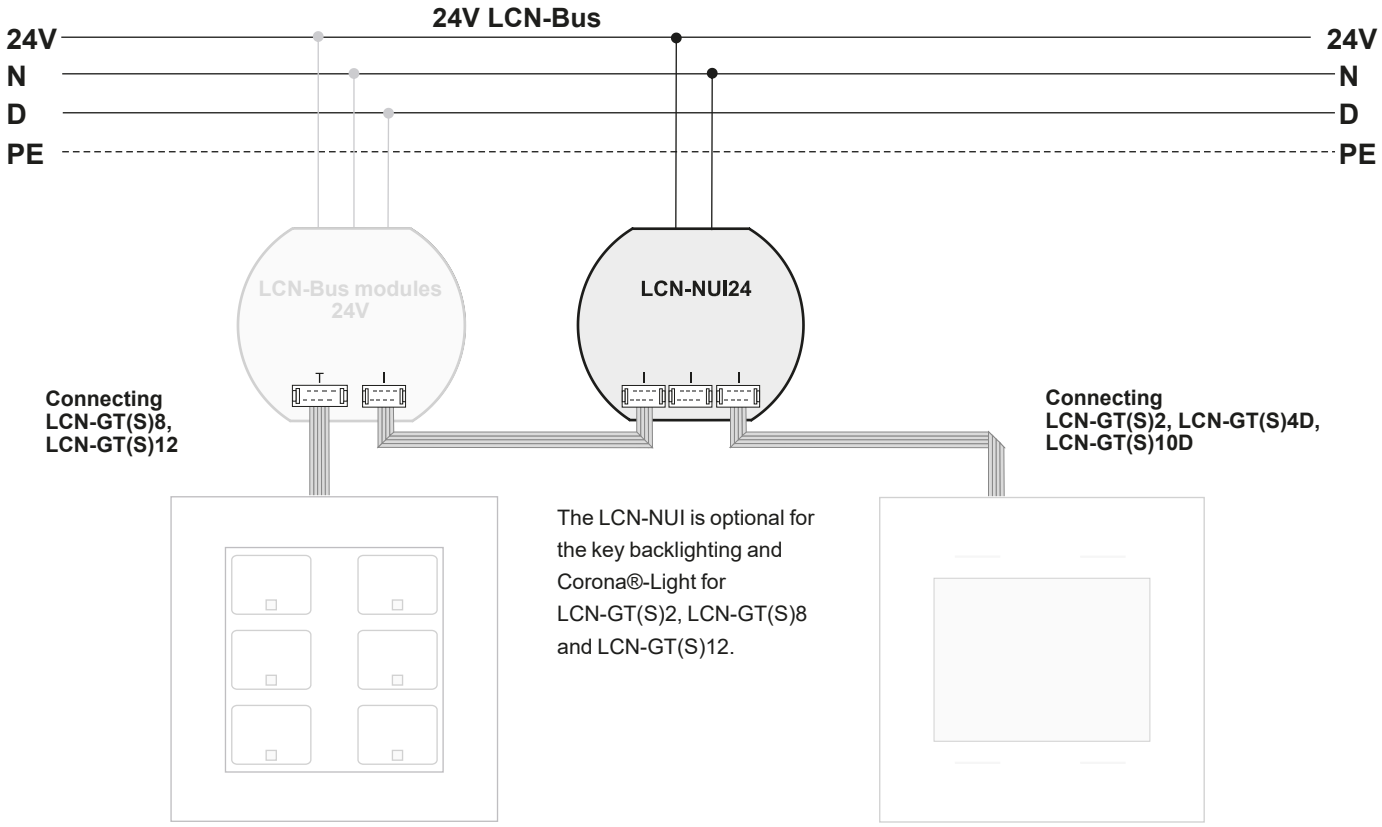

LCN-NIH

I-Port power supply for DIN rail mounting

LCN-NIH is a power supply unit for DIN rail mounting. It supplies power for LCN-GT keypads via the I-Port.

Description

LCN-NIH is a power supply to provide power for the LCN-GT glass touch keypads, and is operated on the T- and I-Port. Thanks to the looped through I-Port, he can be simply looped into the I-Port cable and supply the modules over this cable. As a power supply it has enough power to supply all possible I-Port components of intelligent LCN-modules.

When using the power supply, the blue key background light and especially the Corona® lights are available on the LCN-GT glass touch-keypads.

Hardware

- 1 x I-Port connection cable
- 1 x I-Port connection for further peripherals
- 2 x Screw terminals

Note:
I-port guidelines

The I-Port cable can be extended up to 50 meters (all diverted lengths added up) with an LCN-IV (use Ø 0.5/0.8 mm). The distance from LCN-NUI24 up to a maximum of two LCN-GT glass touch keypads must not be longer than 20 meters. For more detailed information please refer to the installation guide.

LCN-NIH

I-Port power supply for DIN rail mounting

- **Power supply with a 5 volt DC output**
- **For DIN rail mounting**
- **With three I-Port connections**

Technical Data

Connection:

Power supply:	110-230 VAC, 50/60 Hz
Connection power side:	solid or strand wire max. 2.5 mm² or with insulated ferrules 1.5 mm²

Output

Voltage:	5 VDC
Power output:	max. 2.5 W
Connection output voltage:	for screwing, solid or strand wire (max. 0.8 mm Ø), with and without insulated ferrules

General details:

Operating temperature:	-10 to 40 °C
Humidity:	Max. 80% rel., no condensing
Environmental conditions:	Stationary installation according to VDE 632,VDE 637
Degree of protection:	IP 20

Dimensions:

LCN-NIH (W x H x D):	37 x 92 x 66,5 mm 61,5 mm via DIN rail
Space requirement:	2 DU
Installation:	on 35 mm mounting rail (DIN 50022)

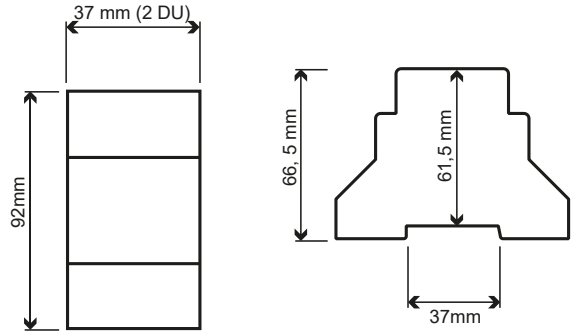

Circuit diagram

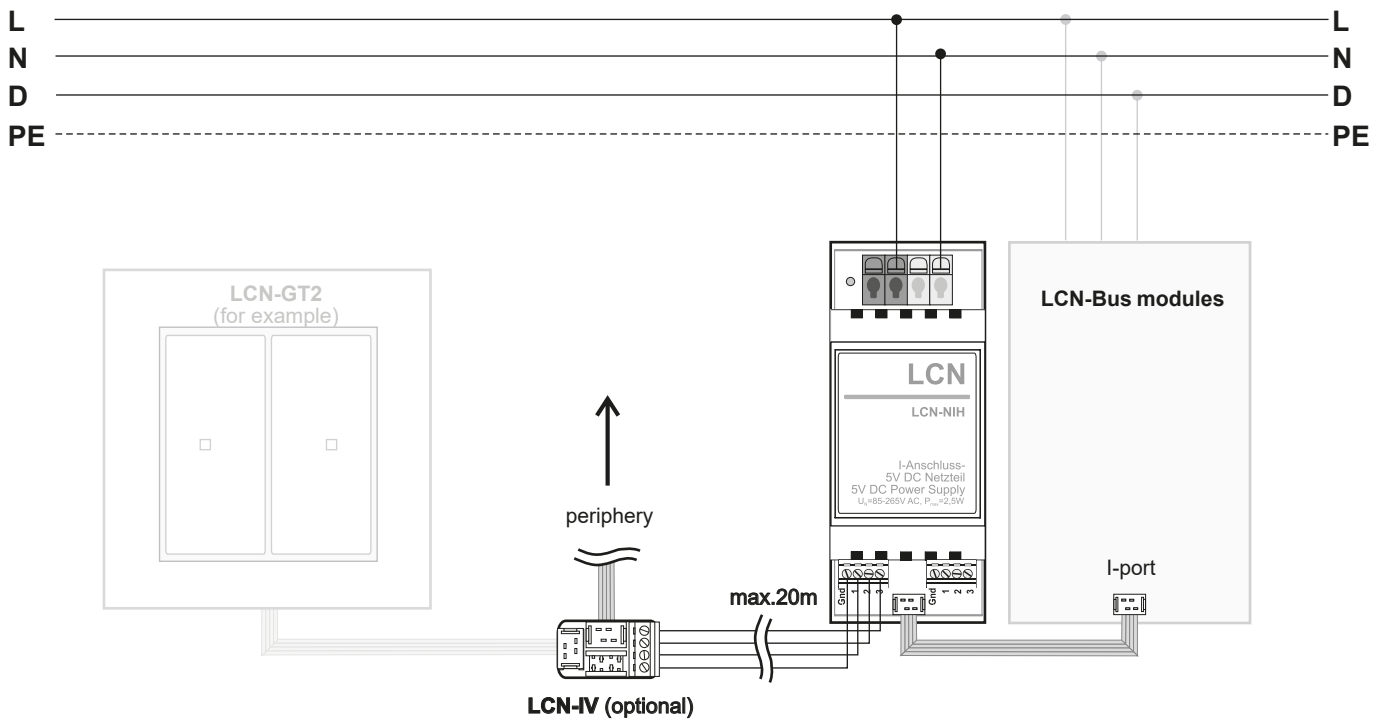

LCN-NDH

DALI power supply for rail mounting

The LCN-NDH is a DALI power supply for an optional operation on the LCN-HU and LCN-SHD module, firmware 170205 (Feb. 2013) or later.

Application fields

When operating the LCN-NDH, it is possible to operate the control ballasts in the normal mode, instead of in the energy efficient DALI-LCN mode (low level). Through this, the lights will be switched on fully if a cable breakage occurs. In LCN mode, the lights will keep their last brightness level if an error occurs. When Using the LCN-NDH up to 32 DALI ballasts can be controlled in the DALI standard operation mode (high level).

Hardware equipment:

- Output for power supply

Function description:

LCN sends group commands to the DALI-interface. The DALI group addresses 1, 2, 3 and 4 are permanently combined with the electronic outputs: All ECGs, that are a member of group 1, follow the 1st output, the ones in group 2 follow the 2nd, and so on.

Control of DALI-EVGs

- Output 1 controls DALI-group 1
- Output 2 controls DALI-group 2
- Output 3 controls DALI-group 3
- Output 4 controls DALI-group 4

In the DALI operation, only the 1st ECG output on the LCN-HU will be switched, the other EVG terminals are without function. The LCN-NDH is switched parallel to this.

LED green on+red off	= standby (no telegram)
LED green+red flashing	= active (DALI telegram traffic)
LED both off	= error

Note:
The DALI operation is only possible, when LCN-GT4D or LCN-GT10Ds are not being operated at the same time. Excluded is also operating lights with LCN iLED (= ”LEDnet”) connections at the same time. To address the ECGs, please use a programming device from the respective ECG manufacturer.

The control gears from the company TRIDONIC after year of manufacture 2012, can be used without limitation! For more detailed information please refer to the installation guide.

LCN-NDH

DALI power supply for rail mounting

- **DALI power supply for DIN rail mounting**
- **With three DALI connections**

Technical Data

Connection:

Supply voltage:	230 VAC ±15%, 50/60 Hz optional 110 VAC
Input power:	1.5 W
Terminals:	Screwless, max. 16 A solid or strand wire max. 2.5 mm² or with insulated ferrules 1.5 mm²

Output

Output voltage:	according to DALI specification, polarized interface
Terminals/Conductor Type :	solid or strand 0.5-1.5 mm²
Number of DALI devices :	Max. 32 ECGs in total

General details:

Operating temperature:	-10 to 40 °C
Humidity:	max. 80% rel., non condensing
Environmental conditions:	Stationary installation according to VDE 632,VDE 637,
Degree of protection:	IP 20

Dimensions:

LCN-NDH (W x H x D):	37 x 92 x 66,5 mm 61,5 mm via DIN rail
Space requirement:	2 DU
Installation:	on 35 mm mounting rail (DIN 50022)

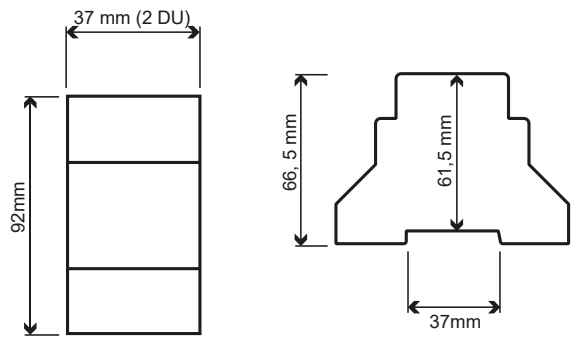

Circuit diagram

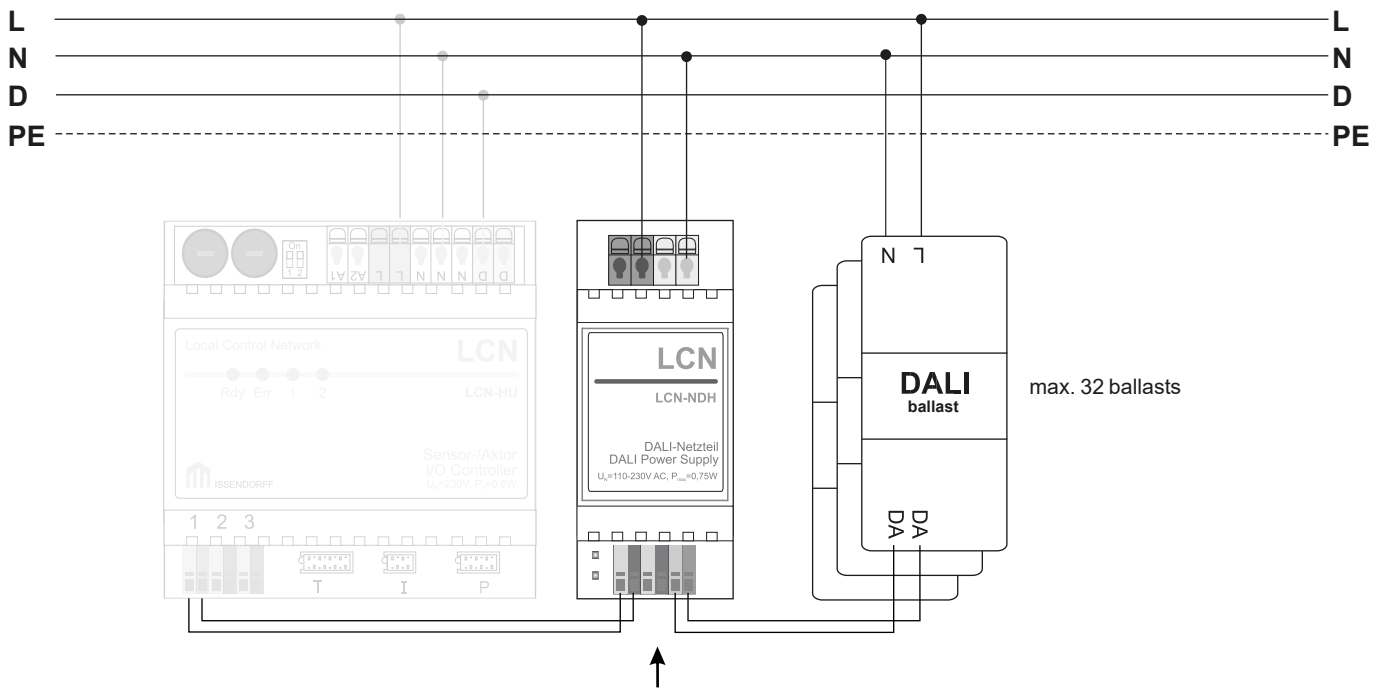

The three terminal pairs of LCN-NDH are connected parallel,
they can be assigned as desired.

ISSENDORFF KG Magdeburger Str.3 30880 Laatzen - Germany Tel: +49 5066 99 80 www.LCN.eu

LCN-NH12

12 V motor power supply unit

The LCN-NH12 is a low voltage PSU capable of reversing the polarity of its output. It converts 230 VAC into low voltage for shutter and blind motors.

Application fields

The LCN-NH12 is directly connected to one of the two 230 Volt outputs of an LCN module and a 12 Volt motor. The LCN-NH12 can also be used outside of the LCN system for controlling other devices requiring low voltage rather than 230 Volt.

Hardware

- Output for power supply with 12 Volt (reversible polarity)
- Status display

Note:
The power supply is unregulated which means that the open circuit voltage is higher than the nominal voltage! For more detailed information please refer to the installation guide.

Circuit diagram

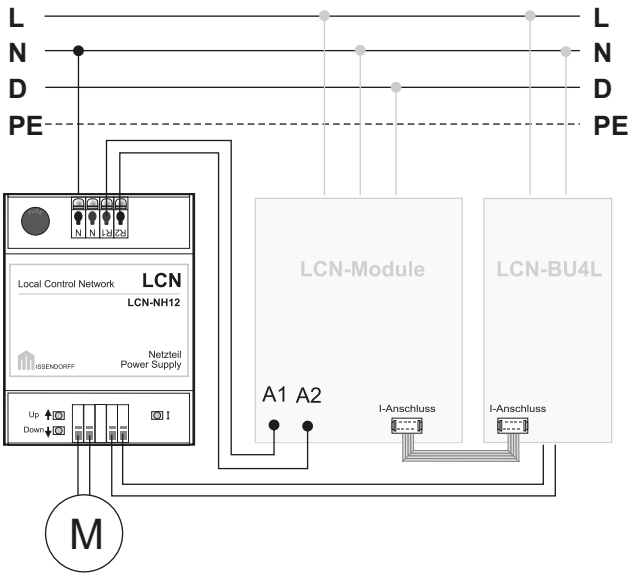

Technical Data

Connection:

Supply voltage:	230 VAC ±15%, 50/60 Hz
Input power:	max. 12 W
Micro fuse:	100 mA T
Terminals:	Screwless
Cable type:	max.16 A solid or strand wire max. 2.5 mm² or with insulated ferrules max.1.5 mm²

Output

Voltage:	±12VDC
Power capacity:	1 A
Neutral voltage:	16 VDC

General details:

Humidity:	max. 80% rel., non condensing
Environmental conditions:	Stationary installation according to VDE 632,VDE 637, IP20

Dimensions:

LCN-NH12 (W x H x D):	62 x 92 x 66,5 mm
Installation:	on 35 mm mounting rail (DIN 50022)

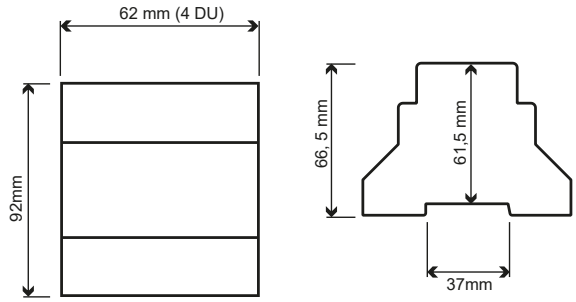

LCN-NH24

24 V motor power supply unit

The LCN-NH24 is a low voltage PSU capable of reversing the polarity of its output. It converts 230 VAC into low voltage for shutter and blind motors.

Application fields

The LCN-NH24 is directly connected between one of the two 230 Volt outputs of an LCN module and a 24 Volt motor. The LCN-NH24 can also be used outside of the LCN system for controlling other devices requiring low voltage rather than 230 Volt. Can also be used as a simple 24 Volt power supply unit for DC voltage.

Hardware equipment:

- Output for power supply with 24 V (reversible polarity)
- Status display

Note:
The power supply is unregulated which means that the open circuit voltage is higher than the nominal voltage! For more detailed information please refer to the installation guide.

Circuit diagram

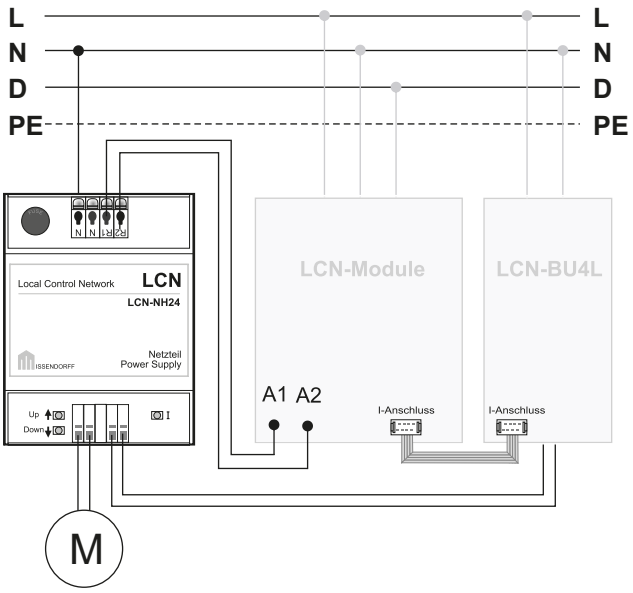

Technical Data

Connection:

Supply voltage:	230 VAC ±15%, 50/60 Hz
Input power:	max. 12 W
Micro fuse:	100 mA T
Terminals:	Screwless
Cable type:	max.16 A solid or strand wire max. 2.5 mm² or with insulated ferrules max.1.5 mm²

Output

Voltage:	±24 VDC
Power capacity:	0.5 A
Neutral voltage:	30 VDC

General details:

Operating temperature:	-10°C to 40°C
Humidity:	max. 80% rel., non condensing
Environmental conditions:	Stationary installation according to VDE 632,VDE 637, IP20

Dimensions:

LCN-NH24 (W x H x D):	62 x 92 x 66,5 mm
Installation:	on 35 mm mounting rail (DIN 50022)

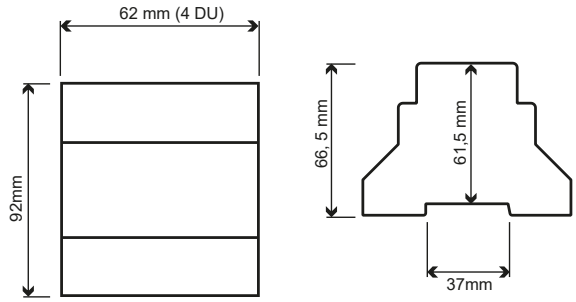

ISSENDORFF KG Magdeburger Str.3 30880 Laatzen - Germany Tel: +49 5066 99 80 www.LCN.eu

LCN-C2GH

Base load module for rail mounting

The LCN-C2GH is a base load module for DIN rail assembly in distribution boxes. It has two inputs for electronic LCN outputs, LCN key inputs or binary contacts.

Application fields

The LCN-C2GH is used for increasing the base load at electronic LCN outputs , e. g. for driving relays and contactor coils respectively. Additionally, the LCN-C2GH is used in key circuits with signal lamps or binary signals for suppressing the occurrence of leakage currents.

Note:
If relay or contactor coils are controlled by electronic LCN outputs, corresponding LCN-C2GHs should be included. For more detailed information please refer to the installation guide.

Dimensions:

LCN-N2GH (W x H x D):	37 x 92 x 66,5 mm
Installation:	on 35 mm mounting rail (DIN 50022)

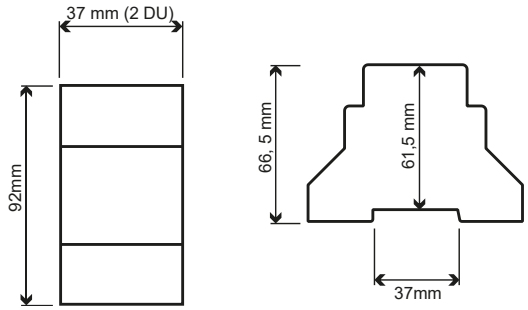

Technical Data

Connection:

Supply voltage:	230 VAC ±15%, 50/60 Hz
Power capacity:	< 1 W
Wiring option:	screwless
Conductor type:	max.16 solid or strand wire max. 2.5 mm² or with ferrules max.1.5 mm²

General details:

Operating temperature:	-10 to 40 °C
Humidity:	max. 80% rel., non condensing
Environmental conditions:	Stationary installation according to VDE 632,VDE 637,
Degree of protection::	IP 20

Circuit diagram

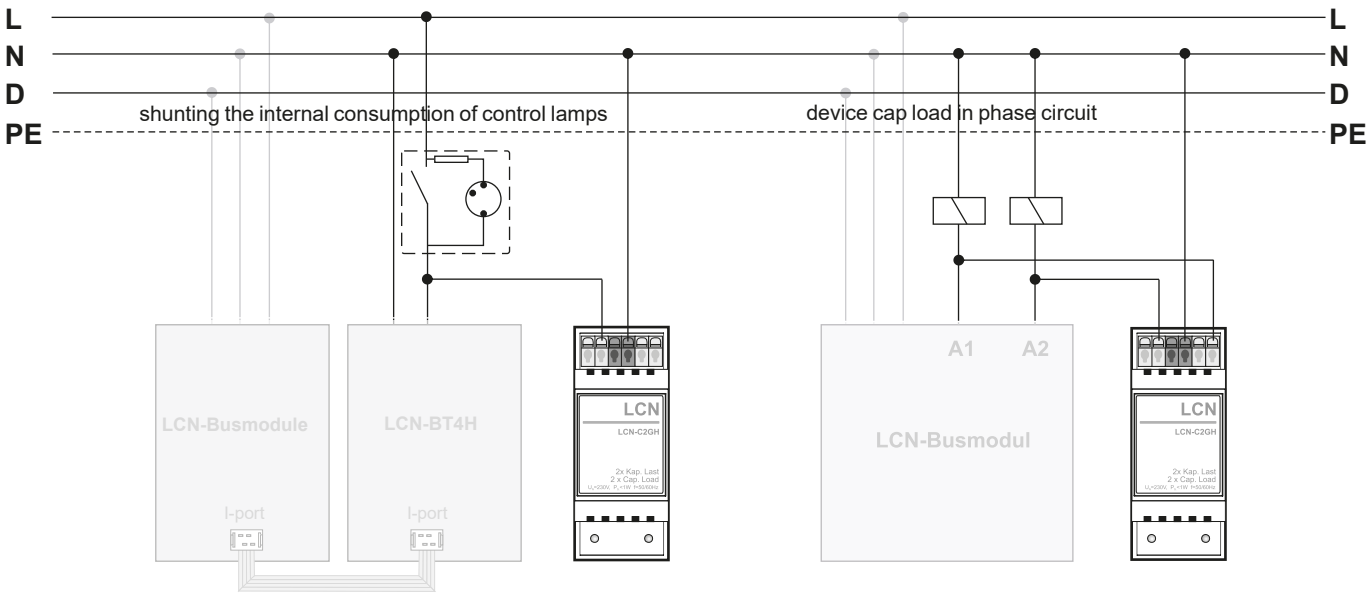

LCN-C2GR

Base load module for flush-mounting

The LCN-C2GR is a base load module for decentralised installation. It has two connection options and is used in parallel with key inputs.

Field of application:

The LCN-C2GR is used in push-button controls with signalling lamps in order to suppress leakage current.

Note:
If relay or contactor coils are controlled by electronic LCN outputs, corresponding LCN-C2GHs should be included. For more detailed information please refer to the installation guide.

Dimensions:

LCN-C2GR (Ø x H):	50 x 21 mm
Installation:	decentralized installation in a deep flush-mounted box

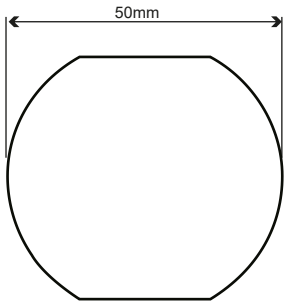

Technical Data

Connection:

Supply voltage:	230 VAC ±15%, 50/60 Hz
Power input:	< 0.3 W
Connecton power side:	strand wire 0.75 mm² (with insulated ferrules)

General details:

Operating temperature:	-10 to 40 °C
Humidity:	max. 80% rel., non condensing
Environmental conditions:	Stationary installation according to VDE 632,VDE 637,
Degree of protection:	IP 20

Circuit diagram

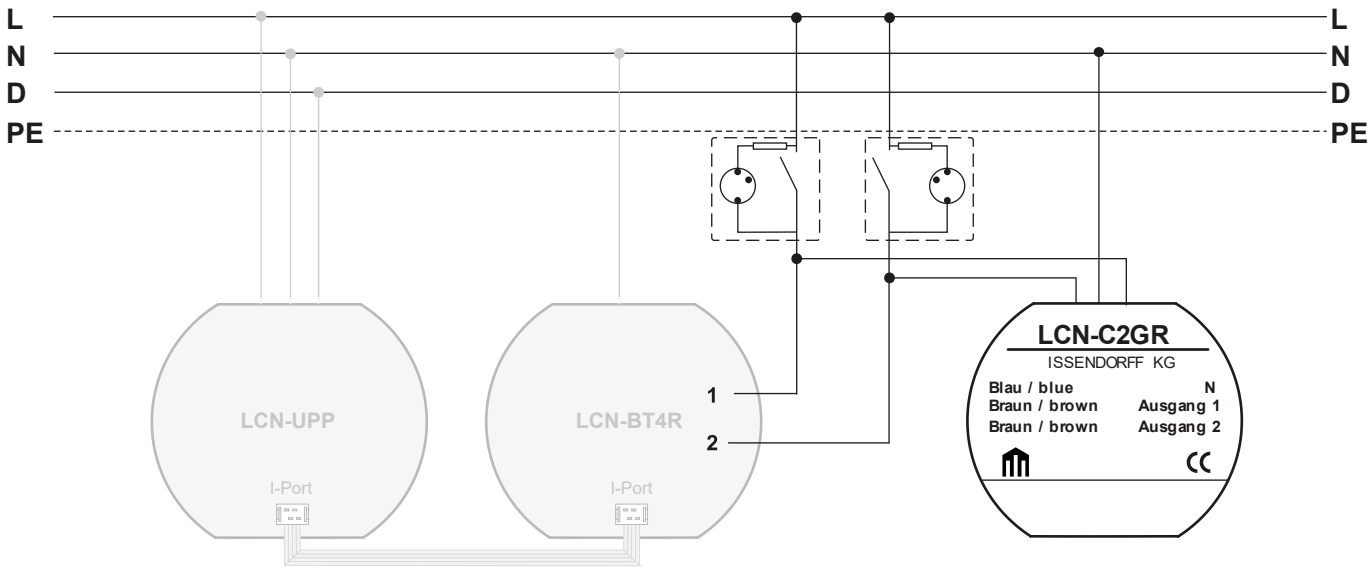

ISSENDORFF KG Magdeburger Str.3 30880 Laatzen - Germany Tel: +49 5066 99 80 www.LCN.eu

LCN-K3

Terminal block for DIN rail mounting

The LCN-K3 is a three-pole terminal block with plug-in terminals for mounting in distribution boxes.

Application

The LCN-K3 provides a plug-in connection for the LCN-PKU and is mounted in distribution boxes, preferably in installations where the LCN-PKU is not to be permanently mounted.

Hardware

- Terminal block for the DIN rail
- Plug for connection a LCN-PKU PC coupler

Note:
For more detailed information please refer to the installation guide.

LCN-K3

Terminal block for DIN rail mounting

- **3 pole connection terminal**
- **Only 1 DU (Divided Unit) of space required**

Technical Data

Connection:

Power supply :	230 VAC ±15%, 50/60 Hz
Terminal type:	screwless
Wire type:	max. 16 A, solid or strand wire- max. 4 mm² or with insulated ferrules max. 2.5 mm²

General details:

Operating temperature:	-10 to 40 °C
Humidity:	max. 80% rel., non condensing
Environmental conditions:	Stationary installation according to VDE 632,VDE 637,
Degree of protection:	IP 20

Dimensions:

LCN-K3 (L x W x H):	17 x 75 x 52 mm
Space requirement:	1 DU
Assembly:	on 35 mm mounting rail (DIN 50022)

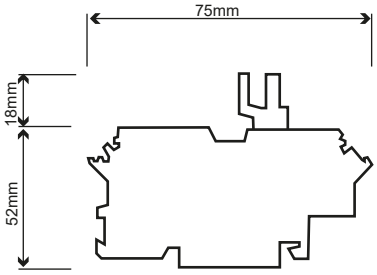

Circuit diagram

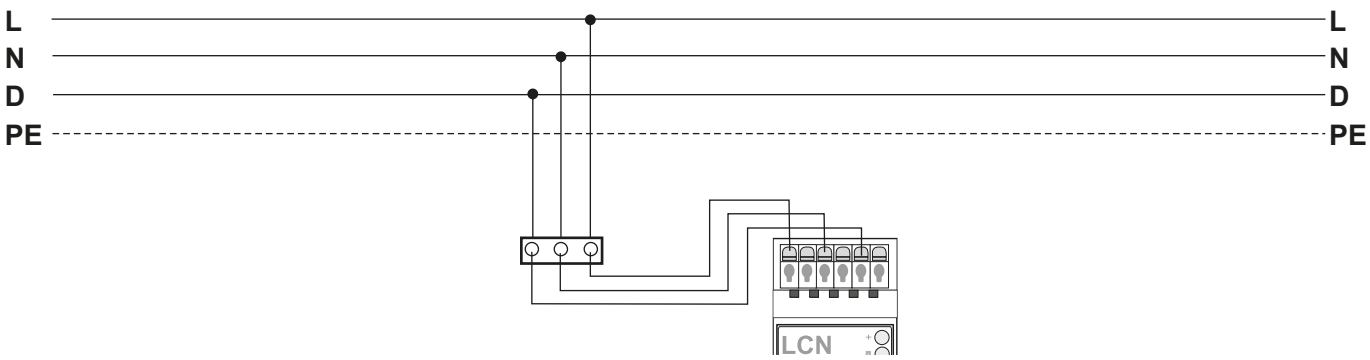

LCN-AVN

Mains voltage actuator 230 V for heating and air conditioning

The LCN-AVN is a thermoelectric actuator for radiator valves. It can be connected to valves of various manufacturers by means of an adapter. The actuator is intended for operation on LCN bus modules dating from 04/2008. All LCN actuators are normally closed (NC).

Application field

The actuating mechanism works with a PTC heated expansion element and a compression spring. When the operating voltage is applied, the expansion element heats up causing the integrated tappet to move. The force generated by this movement is transferred to the valve tappet and opens or closes the valve. The LCN-AVN has a marking on the tappet which indicates the opening width.

The LCN-AVN is supplied in first-open-position, so that it is normally open (NO). This enables the building being heated during the construction phase and when the electrical wiring for single room controls have not yet been completed. By switching on the operating voltage for longer than 6 minutes the first open function is automatically unlocked and the actuator is fully functional (normally closed NC). The actuator clips onto the valve adapter. By pressing the perspex access cover, it can be taken off again. The perspex access cover can be easily removed, so that the actuator is safeguarded against being unlocked.

Hardware

- Pre-installed actuator with connection cable
- 2 x 0.75 mm² with ferrules, length: 1 meter
- Universal adapter VA 80

Optional:

- Valve adapter VA 78 (Danfoss RA, 23 mm inner diameter)
- Valve adapter VA 16H (Herz, 28 mm x 1,5)

Technical data

Mode of action:	Termoelectric (factory-made open, after initial operation without power closed)
Operating power:	230 VAC ±15%, 50/60 Hz
Actuating force:	100 N ±5%
Safety class/protection::	II / IP 54
Operating temperature:	0 to 60 °C
Consumption:	1.8 W
Connecting cable:	Wire 2 x 0.75 mm2 with ferrules, lenght: 1 m

Circuit diagram

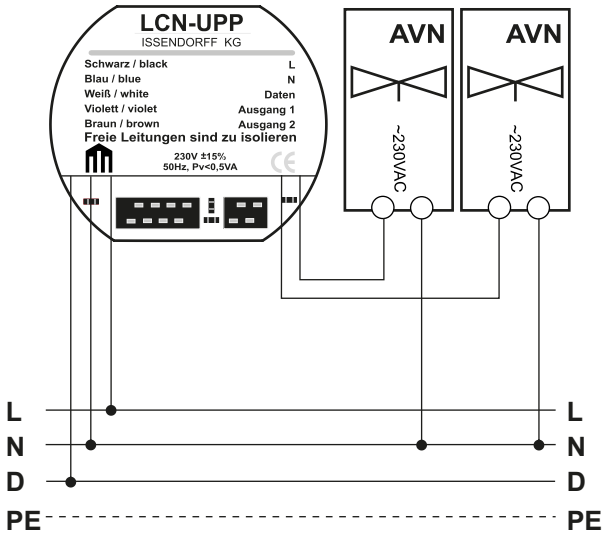

Dimensions

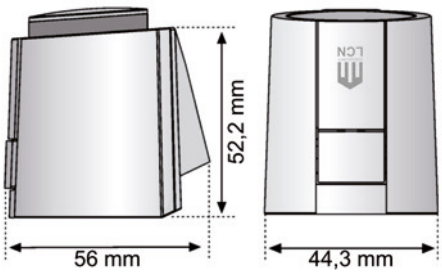

LCN-AVC

Low voltage actuator 0-10 V for heating and air conditioning

The LCN-AVC is a thermoelectric actuator with electronic path measurement for radiator valves. All LCN actuators are normally closed (NC).

Application field

The actuating mechanism works with a PTC heated expansion element and a compression spring. When the operating voltage is applied, the expansion element heats up causing the integrated tappet to move. The force generated by this movement is transferred to the valve tappet and opens or closes the valve.

The actuator LCN-AVC with 0-10 V control is deployed when several radiators in a large room are to be controlled by the same controller. Every actuator measures its valve ensuring that heat output is evenly distributed amongst all of the radiators during parallel operation- regardless of the valve characteristics. Up to five actuators can be operated in parallel per 0-10 V output on a LCN-HU.

Hardware

- Pre-installed actuator with connection cable (3 x 0.22 mm² with ferrules, length: 1 m)
- Universal adapter VA 80

Optional:

- Valve adapter VA 78 (Danfoss RA, 23 mm inside diameter)
- Valve adapter VA 16H (Herz, 28 mm x 1.5)

Technical data

Mode of action:	Termoelectric actuator (proportional)
Supply voltage:	24V AC 50-60Hz
Control voltage:	1-10V DC
Actuating force:	100N +/-5%
Safety class/protection:	II / IP54
Operating temperature:	0 bis +60 °C
Consumption:	1,8W
Connecting cable:	3 x 0,22mm², Length: 1m

Circuit diagram

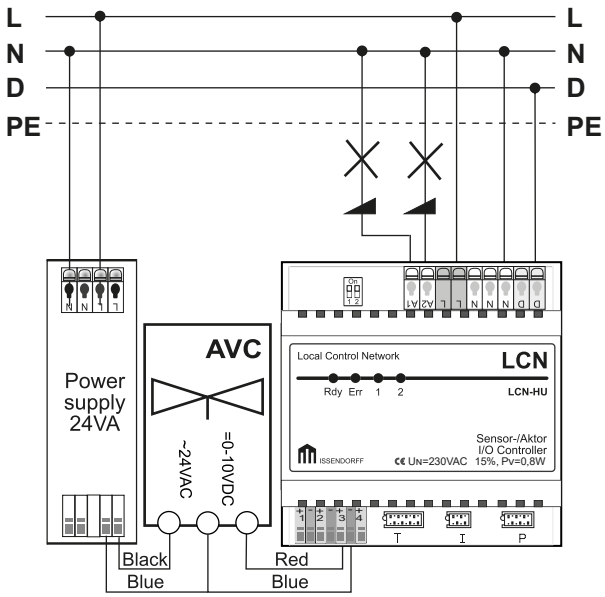

Dimensions

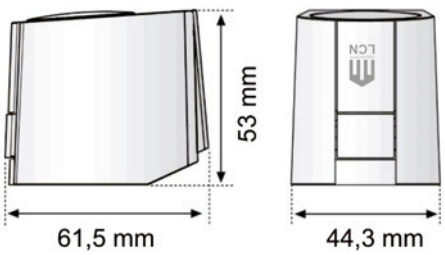

LCN-RSU

Rest voltage suppressor for LED lamps in dimming operation

The LCN-RSU is connected parallel to the load (light) and avoids e. g. flickering/afterglowing of the LEDs or ESLs on the elektronical output.

Application

Because of the VDE required measures, a small capacitive standby current flows out of each power output, even when the TRIACSs are switched off. When connecting LEDs, this might mean that dimming will not proceed harmonically or that the lamp will flash up in a switched off condition. With the LCN-SH/-HU modules, the switch for the output filter can be supportively switched to Off. The LCN-RSU suppresses these unwished effects.

The LCN-RSU is suitable for the following effects/loads:

- Flickering LEDs or ESLs
- „Sticky“ relays
- Afterglowing LEDs

An LCN-RSU is required on each output.

Note:
The delivery scope includes four pieces. For more detailed information please refer to the installation guide.

Technical Data

Connection:

Power supply:	110-230V AC ±15%, 50/60Hz
Power capacity:	<0,2W
Conductor type:	solid 0,75 mm

General details:

Operating temperature:	-10°C to +40°C
Humidity:	max. 80% rel., non condensing
Environmental conditions:	Stationary installation according to VDE 632,VDE 637,
Degree of protection:	IP20

Circuit diagram

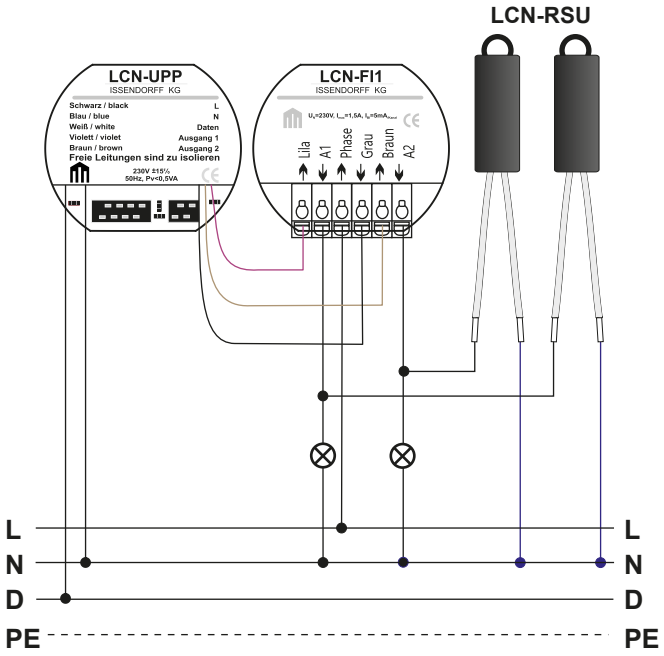

Dimensions

LCN-RSU (Ø x H):	12 x 33 mm

LCN-A6835

Adapter frame for reducing the flush mounted box from 68 mm to 35 mm

With the adapter frame, 68 mm flush mounted boxes and cavity wall boxes can be reduced to the siize of a 35 mm lamp outlet box. LCN glass sensors LCN-GBL, LCN-GUS and LCN-GRT, and it is also suitable for installing the key-sensor LCN-GT6L.

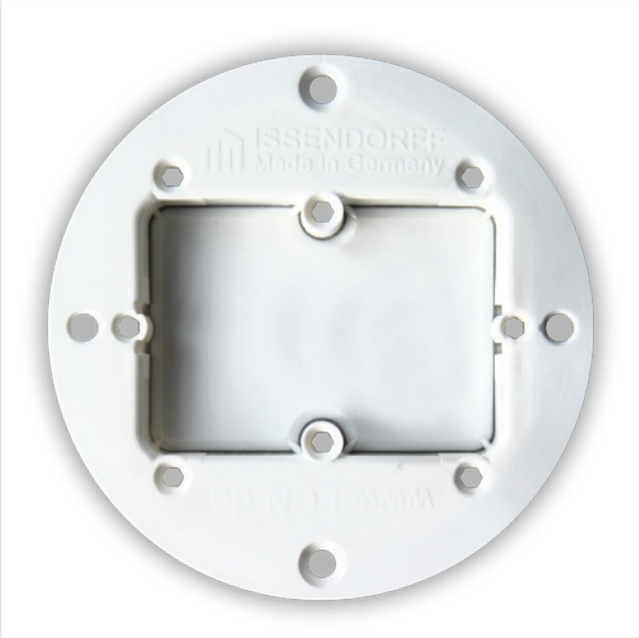

Application examples

The LCN-A6835 is suitable for cavity walls and flush mounted boxes. The adapter frame can be bedded in plaster or covered over with wallpaper. Please make sure when covering with plaster, to countersink the flush mounted box, and to turn the adapter frame around.

Please remove the base at the back, to enable wires to be fed through. The size of the removed base has been chosen, so that LCN modules can be inserted without any problem.

Note:
The delivery scope includes five pieces. For more detailed information please refer to the installation guide.

LCN-SKO

Training case

The LCN-SKO is the training case for the LCN bus system. Thanks to this comprehensive set of equipment including two intelligent bus modules, key interface, remote control and IR receiver as well as the coupling module and the LCN-PRO software, an easy introduction to the world of LCN is guaranteed.

Application

The LCN-SKO enables one to construct a small system and familiarise oneself with the technology. The LCN bus system is especially suited to any field of building automation and is fully adaptable according to the requirements of the corresponding building. Thus the system can be comprehensively applied in private house buildings,functional constructions, industry or trade buildings, high-rise buildings and many other specialised areas of application.

Hardware

Modules:
LCN-UPU
LCN-SH

Coupler:
LCN-PKU

Remote control:
LCN-RT

LCN-RR

Glas Touch-Keypad::
LCN-GT8W

Accessories:
USB adapter, cables, connectors and documentation

Software:
LCN programming software as full version, including free updates

Note:
This partner offer only applies to specified electricians. Only one training case is offered to each company.

Notes

Notes

www.LCN.eu

LCN®

ISSENDORFF KG
Wellweg 93
31157 Sarstedt

Werk Rethen
Magdeburger Street 3
30880 Laatzen - Rethen

Pho +49 5066 998-0
Fax +49 5066 998-899
Mail info-de@lcn.de

HÄNDLERSTEMPEL

Made in Germany

Perfection.